Operations & Repair Manual

Product Type : Tank Cleaning Machine
Rotating Jet-Head

Model : LT

Manufacturer : Butterworth®, Inc.

Model Number : _____

Manual Number : 132.2008.01.03
Release Date : Pending

Project Number : _____

Serial Number(s) :

Butterworth®, Inc. – 16737 West Hardy Street – Houston, TX 77060 - USA

Phone : 281.821.7300
Fax : 281.821.5550
Internet E-Mail : eng@butterworth.com
Web Site : www.butterworth.com

TRH©2007

TABLE OF CONTENTS

TABLE OF CONTENTS **2**
INTRODUCTION **3**
GENERAL DESCRIPTION **4**
How It Works 4
Standard configurations: 5
INSTALLATION INSTRUCTIONS **6**
TECHNICAL DATA **7**
Dimensions and Weight 7
Performance Curves – PRESSURE & FLOW 8
Performance Curves – Pattern Time 9
Performance Curves – Jet Length 10
INSTALLATION AND NORMAL OPERATION **11**
General Installation Instructions 11
MAINTENANCE AND REPAIR **12**
PREVENTIVE MAINTENANCE 12
TOP ASSEMBLY 13
Disassembly 13
Reassembly 13
Top Assembly - Exploded View Drawing 14
Impeller housing sub-assembly 15
Disassembly 15
Reassembly 15
Impeller housing sub-assembly - Drawing 16
Bottom Assembly 17
Disassembly 17
Reassembly 17
Bottom Assembly - Exploded View Drawing 18
Hub SubAssembly 19
Hub SubAssembly - Drawing 20
Gearbox SubAssembly 21
Gearbox SubAssembly - Drawing 22
Tool Listing 23
TOOLS **24**
TROUBLE SHOOTING GUIDE **26**
REFERENCE LIST OF PARTS **27**
EXPLODED VIEW DRAWING **32**
CROSSECTIONAL DRAWING **33**
STANDARD SPARE PART KIT **34**
LUBRICANT SPECIFICATION **35**
HOW TO ORDER SPARE PARTS AND WARRANTY CLAIM PROCEDURE **36**
Ordering Spare Parts 36
Warranty Claim Procedure 36

Phone : 281.821.7300
Fax : 281.821.5550
Internet E-Mail : eng@butterworth.com
Web Site : www.butterworth.com

INTRODUCTION

This manual has been prepared as a guide for the persons who will be operating and maintaining your Butterworth® tank cleaning machine. The key to long life for your tank cleaning machine will always be a system of carefully planned maintenance. Tank cleaning machines are expected to perform various types of cleaning jobs. Some applications will require that maintenance is performed more often than with less stringent applications. A properly designed and maintained CIP (Clean In Place) System is paramount to the service life of any tank cleaning machine.

It is in your own interest to get the best and most economical performance from your tank cleaning machine. Neglect of maintenance means poor performance, unscheduled stoppages, shorter life and expense. Good maintenance means good performance; no unscheduled stoppages and better total economy.

You will find the information contained in this manual simple to follow, but should you require further assistance, our Technical Department and worldwide net of Distributors will be pleased to help you. Please quote the type, model, and serial number with all your inquiries; this will help us to help you. The type and serial number are placed on the main body, just below the nozzle body

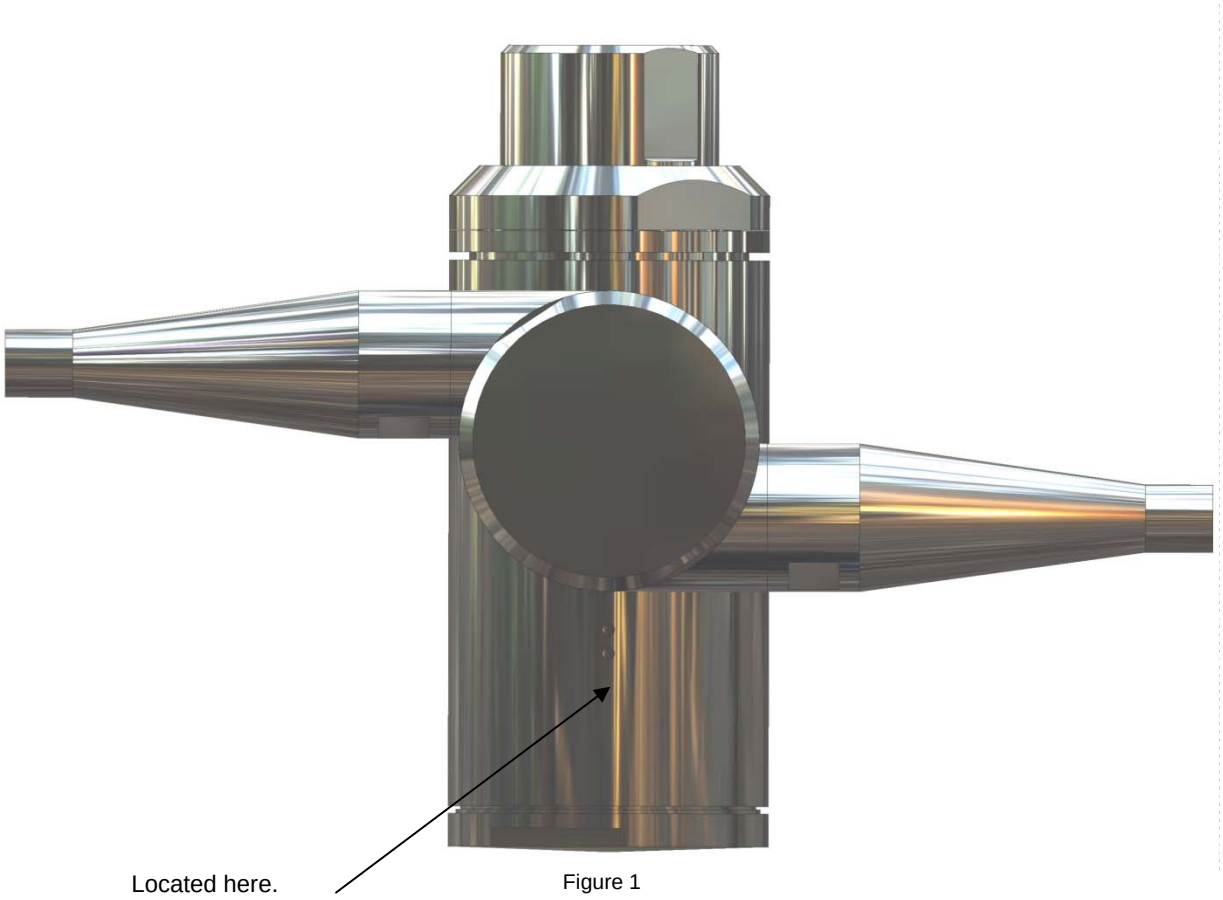

Figure 1

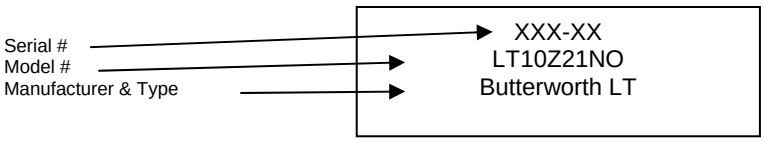

Phone : 281.821.7300
Fax : 281.821.5550
Internet E-Mail : eng@butterworth.com
Web Site : www.butterworth.com

GENERAL DESCRIPTION

The Butterworth® LT is a sealed gearbox tank cleaning machine that uses lubricant (see page 35 for lubricant specifications).

How It Works

The flow of the cleaning fluid into the tank cleaning machine passes through a turbine, which is set into rotation. The turbine rotation is through a gearbox transformed into a combined horizontal rotation of the body and a vertical rotation of the nozzles.

The combined motion of the machine body and the nozzle body creates a pattern matrix on the tank walls similar to the images below, keeping in mind that this pattern will propagate differently in geometries other than those shown here. In other words, the pattern would look different in a vertical cylindrical tank when compared to a horizontal cylindrical tank for a given location of the machine. The LT requires 65 axial revolutions to complete one pattern before it begins to rotate over the same location for a given coordinate within the tank. The images below show a progressive build up of the pattern matrix for a horizontal cylindrical tank. The far left image shows a course build up of the matrix, with the middle image showing a more progressive view and the far right image showing a complete pattern. The far right image is representative of the maximum density for this geometry.

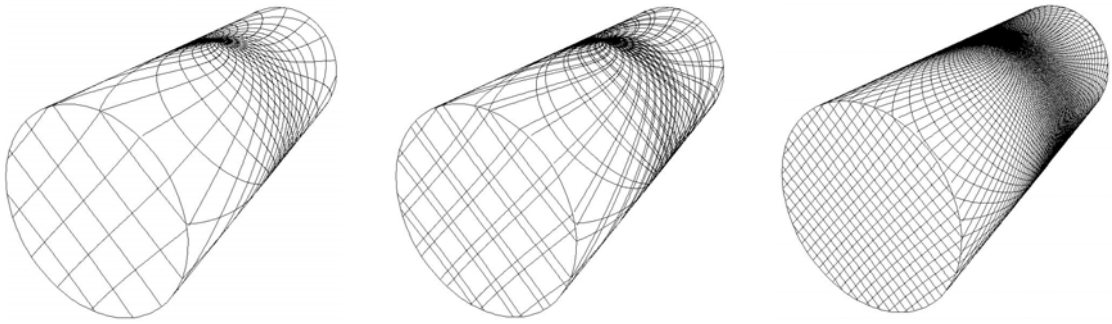

Figure 2

The speed of rotation of the turbine depends on the flow rate through the machine and the type of stator/turbine employed within the tank cleaning machine. The higher the flow rate is, the higher the speed of rotation will be; subject to the style of the guide vane (stator) and impeller (turbine) within the machine. In order to control the RPM of the machine for a wide range of flow rates, the proper machine configuration should be reviewed, relative to the cleaning application.

Apart from the jet flow through the nozzles, no other fluid by design is expelled from any other location on the machine. As this is a sealed unit; start-up rotations are higher than for media-lubricated units.

Phone : 281.821.7300
Fax : 281.821.5550
Internet E-Mail : eng@butterworth.com
Web Site : www.butterworth.com

GENERAL DESCRIPTION

Standard configurations:

√	Model Number	Nozzles (# of Nozzles x Orifice)	Guide Vane & Impeller Configuration	Inlet	Maximum Rotational PSIG	Minimum Rotational Start-Up PSIG	Lubrication	Surface Finish (Exterior)
	LT6Z33NO	2 x 6.0mm	33	1.50” NPT(F)	150 PSIG	35 PSIG	Oil/Grease	≥ 25 Ra µ Inch
	LT6Z33NMO	2 x 6.0mm	33	1.50” NPT(M)	150 PSIG	35 PSIG		
	LT6Z33BO	2 x 6.0mm	33	1.50” BSP(F)	150 PSIG	35 PSIG		
	LT6Z33BMO	2 x 6.0mm	33	1.50” BSP(M)	150 PSIG	35 PSIG		
	LT8Z21NO	2 x 8.0mm	21	1.50” NPT(F)	300 PSIG	50 PSIG		
	LT8Z21NMO	2 x 8.0mm	21	1.50” NPT(M)	300 PSIG	50 PSIG		
	LT8Z21BO	2 x 8.0mm	21	1.50” BSP(F)	300 PSIG	50 PSIG		
	LT8Z21BMO	2 x 8.0mm	21	1.50” BSP(M)	300 PSIG	50 PSIG		
	LT10Z11NO	2 x 10.0mm	11	1.50” NPT(F)	300 PSIG	45 PSIG		
	LT10Z11NMO	2 x 10.0mm	11	1.50” NPT(M)	300 PSIG	45 PSIG		
	LT10Z11BO	2 x 10.0mm	11	1.50” BSP(F)	300 PSIG	45 PSIG		
	LT10Z11BMO	2 x 10.0mm	11	1.50” BSP(M)	300 PSIG	45 PSIG		
	LT10Z21NO	2 x 10.0mm	21	1.50” NPT(F)	150 PSIG	35 PSIG		
	LT10Z21NMO	2 x 10.0mm	21	1.50” NPT(M)	150 PSIG	35 PSIG		
	LT10Z21BO	2 x 10.0mm	21	1.50” BSP(F)	150 PSIG	35 PSIG		
	LT10Z21BMO	2 x 10.0mm	21	1.50” BSP(M)	150 PSIG	35 PSIG		
	LT12Z11NO	2 x 12.0mm	11	1.50” NPT(F)	300 PSIG	40 PSIG		
	LT12Z11NMO	2 x 12.0mm	11	1.50” NPT(M)	300 PSIG	40 PSIG		
	LT12Z11BO	2 x 12.0mm	11	1.50” BSP(F)	300 PSIG	40 PSIG		
	LT12Z11BMO	2 x 12.0mm	11	1.50” BSP(M)	300 PSIG	40 PSIG		

This machine is equipped with a clutched hub. Care should be taken when installing and removing the machine to insure that the nozzles are not inadvertently hit or knocked with any hard blows, as this would transmit forces on the gearing that is best avoided to insure long life and reduced wear.

(Note: Optional configurations are available as non-standard products by contacting your nearest agent or distributor.)

INSTALLATION INSTRUCTIONS

Never attach the LT by grabbing the nozzles to Tighten the machine onto the connection (Figure 3). The Proper way to attach the LT can be seen in Figure 4.

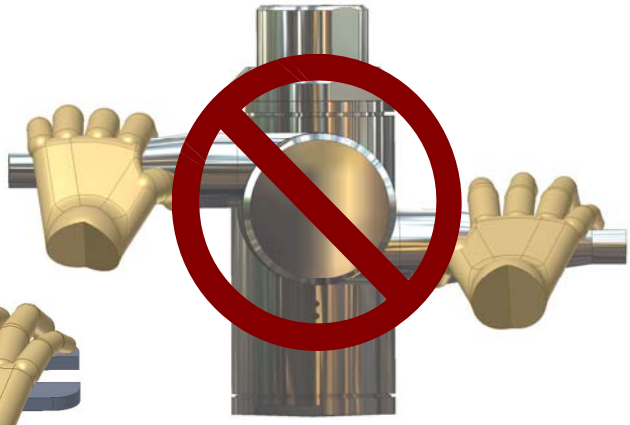

Figure 3

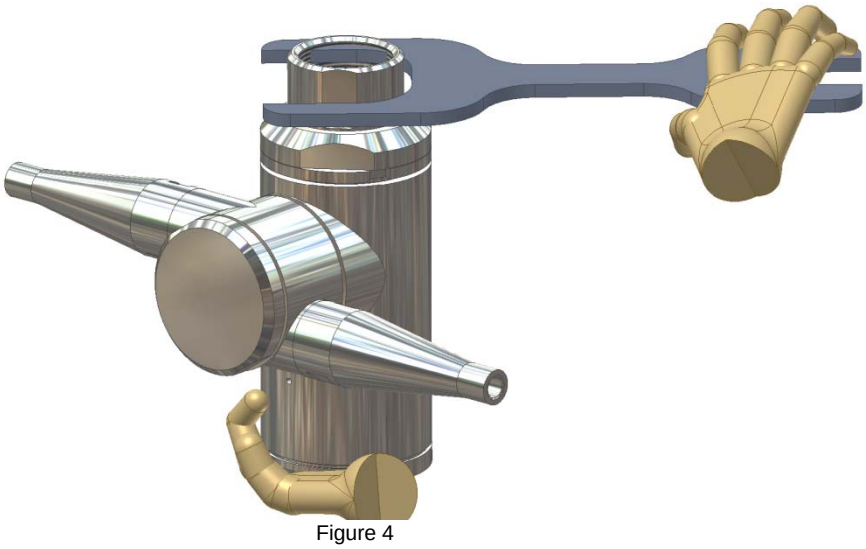

Figure 4

The nature of stainless steel against itself can cause galling. When threading the inlet connection onto your fluid connection, it is recommended that you employ either Teflon tape or another appropriated anti-seizing compound to avoid this event. See comments on conductivity; page 11.

The following product is recommended:

Technical Data Sheet

LOCTITE® Food Grade Anti-Seize

March 2006

PRODUCT DESCRIPTION

LOCTITE® Food Grade Anti-Seize provides the following product characteristics:

Technology	Anti-Seize
Appearance	Smooth white paste[MC]
Components	One component - requires no mixing
Cure	Not applicable
Application	Lubrication
Specific Benefit	• Lubricates, seals, and prevents galling in stainless steel joints and threaded connections • Temperature resistant to 400 °C • Metal free formulation

LOCTITE® Food Grade Anti-Seize prevents seizing, galling, friction, and wear on threaded joints and other metal-to-metal surfaces. It is a combination of white lubricating solids and extreme pressure lubricating agents in an aluminum gelled white oil. Typical applications include pipe joints, nuts, bolts and studs, flange gaskets, slip-fit, press-fit and keyed shafts, and metal-to-metal contact involving stainless steel and other stainless alloys. It is used in industrial food industries such as meat and poultry packing plants, dairy products processing plants, canning plants, grain processing plants, sugar processing plants, bakeries, beverage plants, breweries, hospitals, and other general plant maintenance. This product is typically used in applications with an operating range of -29 °C to +400 °C.

NSF International
Registered to NSF Category H1 for use as a lubricant with incidental food contact in and around food processing areas.

TYPICAL PROPERTIES OF UNCURED MATERIAL

Specific Gravity @ 25 °C	1.08
Penetration, ISO 2137, unworked, 1/10mm	340
Weight Per Gallon, lbs/gal	8.9 to 9.3[MC]
Flash Point - See MSDS	

GENERAL INFORMATION

This product is not recommended for use in pure oxygen and/or oxygen rich systems and should not be selected as a lubricant for chlorine or other strong oxidizing materials.

For safe handling information on this product, consult the Material Safety Data Sheet (MSDS).

Directions for use

1. For best performance the mating surface should be clean and free of grease.
2. Apply thin coating to threads and flats of nuts and bolts, assemble.
3. Use full strength. Do not thin.

Loctite Material Specification℠

LMS dated March 2006. Test reports for each batch are available for the indicated properties. LMS test reports include selected QC test parameters considered appropriate to specifications for customer use. Additionally, comprehensive controls are in place to assure product quality and consistency. Special customer specification requirements may be coordinated through Henkel Quality.

Storage

Store product in the unopened container in a dry location. Storage information may be indicated on the product container labeling.

Optimal Storage: 8 °C to 21 °C. Storage below 8 °C or greater than 28 °C can adversely affect product properties. Material removed from containers may be contaminated during use. Do not return product to the original container. Henkel Corporation cannot assume responsibility for product which has been contaminated or stored under conditions other than those previously indicated. If additional information is required, please contact your local Technical Service Center or Customer Service Representative.

Conversions

(°C x 1.8) + 32 = °F
kV/mm x 25.4 = V/mil
mm / 25.4 = inches
µm / 25.4 = mil
N x 0.225 = lb
N/mm x 5.71 = lb/in
N/mm² x 145 = psi
MPa x 145 = psi
N m x 8.851 = lb in
N m x 0.735 = lb ft
N·mm x 0.142 = oz·in
mPa·s = cP

Note

The data contained herein are furnished for information only and are believed to be reliable. We cannot assume responsibility for the results obtained by others over whose methods we have no control. It is the user's responsibility to determine the suitability for his own particular purpose of methods mentioned herein and to adopt such precautions as may be advisable for the protection of property and of persons against any hazards that may be involved in the handling and use thereof. In light of the foregoing, Henkel Corporation specifically disclaims all warranties expressed or implied, including warranties of merchantability or fitness for a particular purpose, arising from sale or use of Henkel Corporation's products. Henkel Corporation specifically

Henkel Technologies

Loctite Product Numbers:

51168: Food Grade Anti-Seize; 8 oz. brush top
51170: Food Grade Anti-Seize; 2 lb. can
51171: Food Grade Anti-Seize; 40 lb. pail

Phone : 281.821.7300
Fax : 281.821.5550
Internet E-Mail : eng@butterworth.com
Web Site : www.butterworth.com

TECHNICAL DATA

Dimensions and Weight

Weight of machine	:	14 lbs (6.35 kgs)
Working pressure	:	0-300 PSIG (0-21 Bar)
Working temperature max.	:	300° F (95° C) Standard Configuration
Materials Of Construction	:	See exploded view drawing (page 32)

Principal dimensions in inches and [mm]:

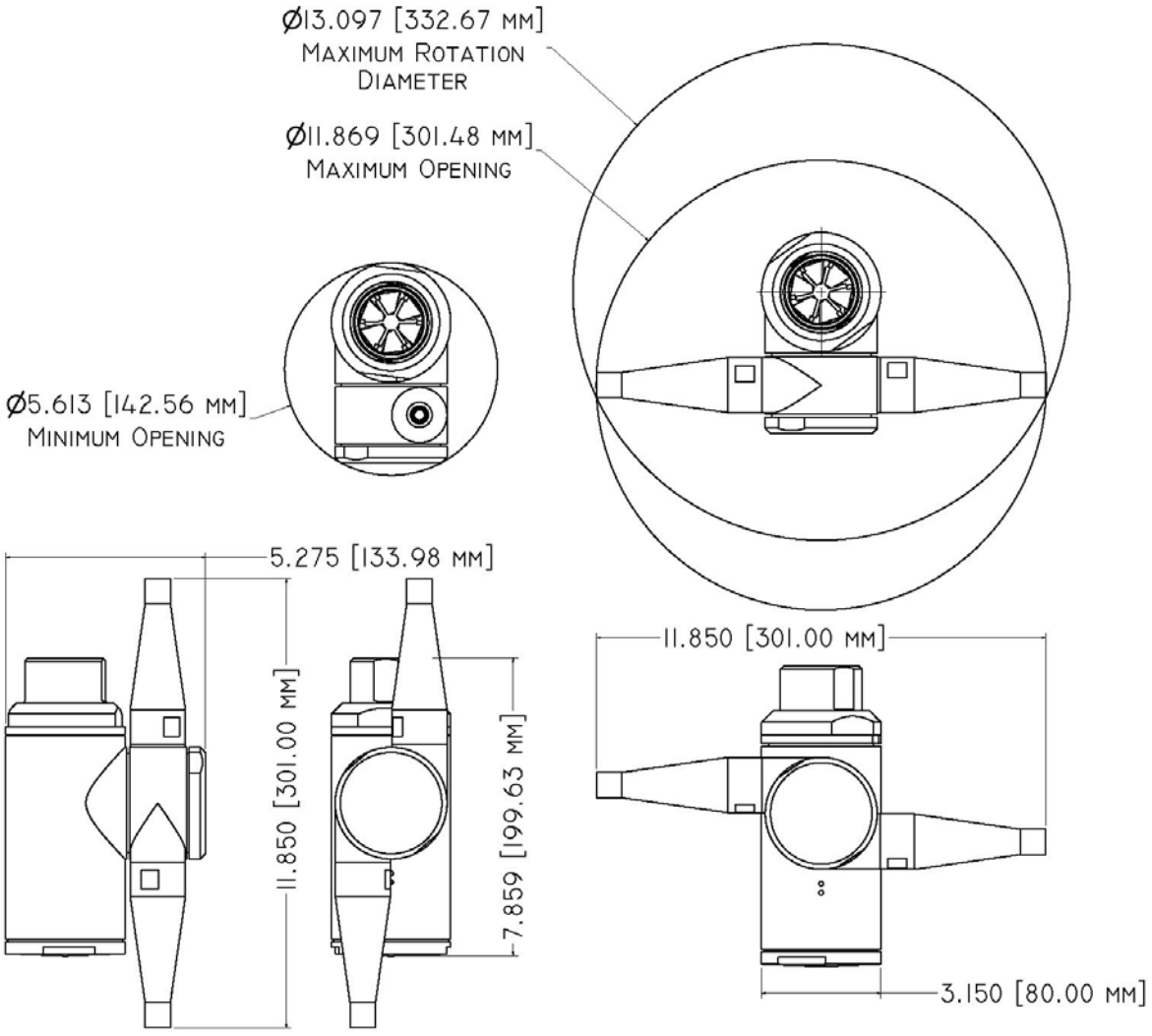

Figure 5

Phone : 281.821.7300
Fax : 281.821.5550
Internet E-Mail : eng@butterworth.com
Web Site : www.butterworth.com

TECHNICAL DATA

Performance Curves – PRESSURE & FLOW

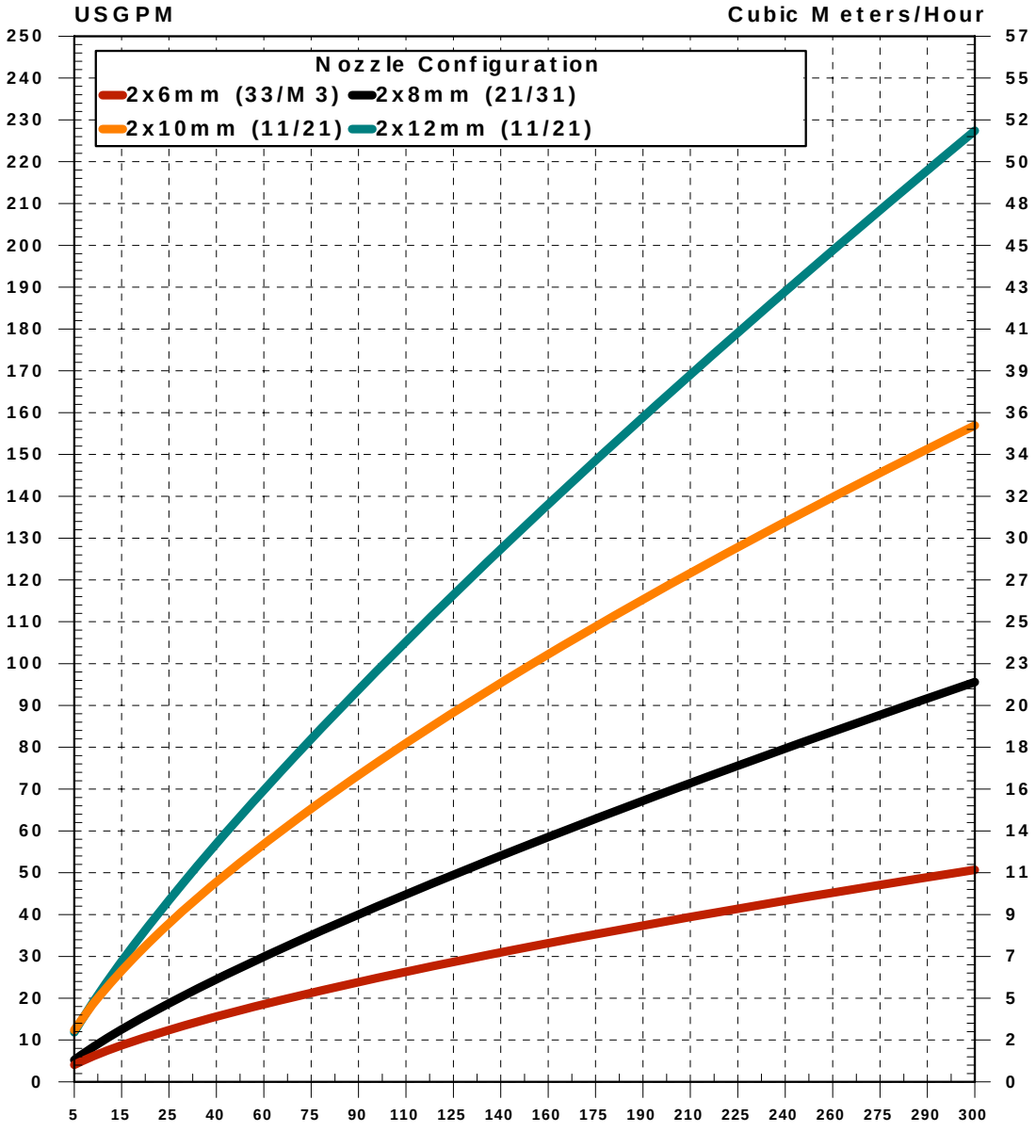

Figure 6

Related as number of nozzles x orifice and guide vane/turbine configuration.
For Example: 4x7 (21) is: 4 nozzles at 7mm each with a type 2 guide vane and type 1 impeller

Note: Throw lengths are measured as horizontal throw length at static condition. Vertical throw length upwards is approximately 1/3rd less. Effective throw length varies depending on jet peripheral speeds over the surface, substance to be removed, cleaning procedure and cleaning agent. The inlet pressure has been taken immediately before the machine inlet. To achieve the performance indicated in the curves, allowance must be made for pressure drop in the supply lines between pump and machine.

TECHNICAL DATA

Performance Curves – Pattern Time

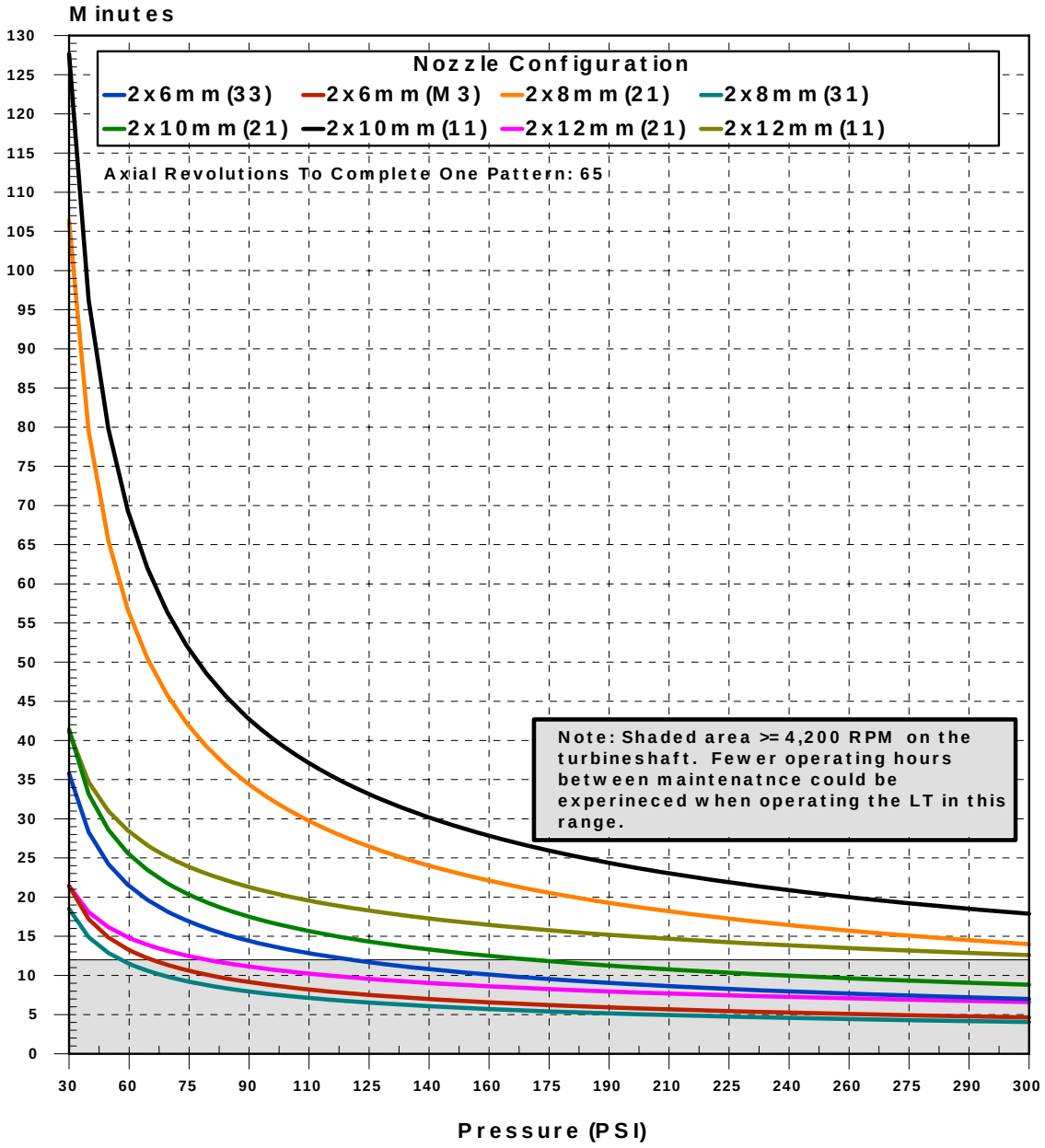

Figure 7

Note: The pattern time related in these curves is the time required to make 65 axial revolutions. Pattern time is not indicative of the time required to perform the required cleaning. Depending upon the application, the number of pattern completions will vary for the relative cleaning application.

TECHNICAL DATA

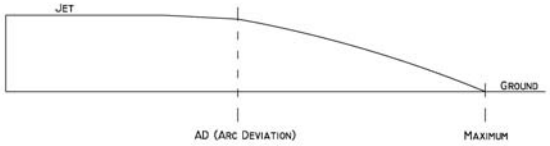

Performance Curves – Jet Length

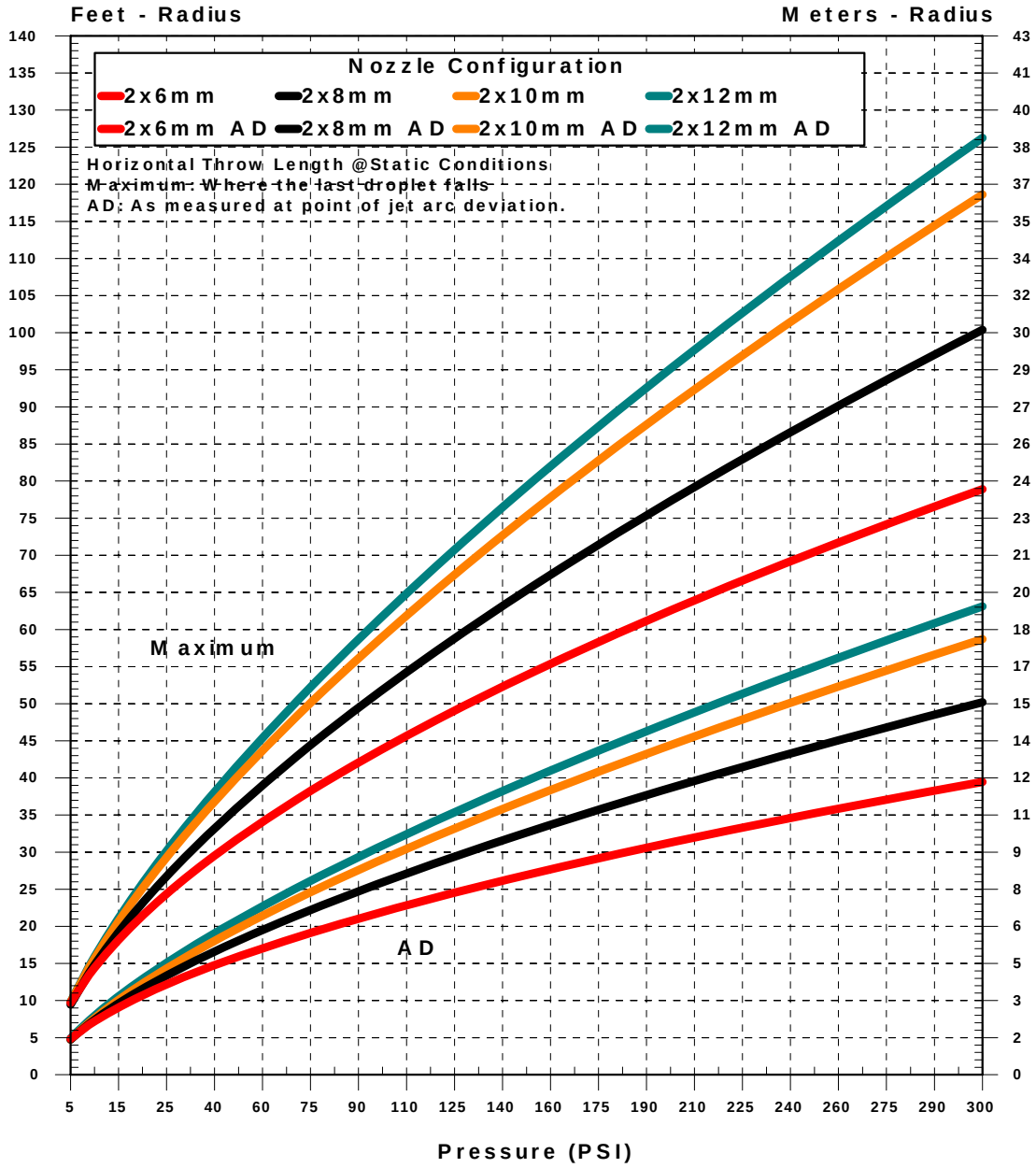

Figure 8

Maximum jet-length on this curve is measured at static conditions and where the last droplet falls. The effective range is subjective to the cleaning requirement. However in this curve effective is at the point of arc deviation.

INSTALLATION AND NORMAL OPERATION

General Installation Instructions

The Butterworth® tank cleaning machine should be installed in vertical position (upright or inverted). It is recommended to install a filter in the supply line in order to avoid large particles lodging inside the machine. Before connecting the machine into the system, all supply lines and valves should be flushed to remove foreign matter.

Recommended filtration: 100-200 micron

Warning: If the machine is *used in potential explosive atmospheres*, tapes or joint sealing compounds, which are electrical insulators, must not be used on threads or joints. In addition, connecting pipe work must be electrically conductive and grounded to the tank structure. This is essential to avoid the build-up of static electricity on the machine.

The Butterworth®tank cleaning machine as delivered has been tested at the factory before shipping.

Normal Operation

Cleaning Media: Use only media compatible with the materials as listed on the reference list of parts as indicated for your model; see page 27.

After Use Cleaning: Depending on the type of cleaning that is being performed and the type of cleaning solution used, a procedure for after use flushing of the cleaning system should be developed for your application. In general, a fresh water flush is recommended after each cleaning.

Pressure: Avoid Hydraulic shocks. Increase pressure gradually; ramping up the pressure over 5-7 seconds. Do not exceed 300 PSI (21 Bar) inlet pressure. High pressure in combination with high flow rate will increase consumption of wear parts and should be expected when compared to operations at lower pressures and flow rates.

Phone : 281.821.7300
Fax : 281.821.5550
Internet E-Mail : eng@butterworth.com
Web Site : www.butterworth.com

MAINTENANCE AND REPAIR

PREVENTIVE MAINTENANCE

In order to keep your Butterworth® tank cleaning machine servicing you as an efficient tool in your tank cleaning operations, it is essential to maintain its high performance by following a simple preventive maintenance program, which will always keep your tank cleaning machine in good condition.

Good maintenance is careful and regular attention!

The following recommended preventive maintenance program is based on tank cleaning machines working in average conditions. However, you will appreciate that a tank cleaning machine, which has a rough and dirty job to do, will need more frequent attention than one working in ideal conditions. We trust that you will adjust your maintenance program to suit.

Always use **only** proper tools. Use Butterworth® standard tool kit (page 24). Never force, hammer or pry components together or apart. Always perform all assembly/disassembly steps in the order described in this manual. Never assemble components without previous cleaning. This is especially important at all mating surfaces. Work in a clear well lit work area.

Every 400 working hours

1. Disassemble machine as described on the following pages leaving the gearbox intact; (position 37).

2. Thoroughly flush the machine prior to disassembly and insure that no hazardous material remains in the machine.

3. Upon complete disassembly of the machine; (except for position 37), all parts should be thoroughly washed and/or degreased in the appropriate manner, then inspected accordingly.

4. Inspect seals and bushings for wear; locate position numbers from the exploded view drawing on page 32 and bill of materials on page 27. Replace if unduly worn.

5. Inspect bevel gears located at position numbers 12.6 and 17. Replace if unduly worn.

6. Inspect gearbox rotation by inserting position 36 into position 32.3 then gearbox; position 37 observing gear timing into position 32.3. then rotate clockwise. If rotation is not consistent and smooth, then inspection of gears should be undertaken and replaced where necessary. For representation of gear timing, see Figure 20.

7. A service card is included with this manual; (see page **Error! Bookmark not defined.**). This should be completed each time service is performed on your tank cleaning machine so that a proper record/history is maintained.

Phone : 281.821.7300
Fax : 281.821.5550
Internet E-Mail : eng@butterworth.com
Web Site : www.butterworth.com

MAINTENANCE AND REPAIR

TOP ASSEMBLY

Disassembly

1. Secure tank cleaning machine in vice; using soft jaws to avoid damaging the finish.
2. Remove position 1 by rotating clockwise while holding inlet ring; position 12.4 using spanner wrenches as shown in Figure 26 and Figure 30. Also see Figure 9.
3. Remove position 2 by hand and slightly tapping with a rubber mallet from side to side.
4. Remove position 3 and 4.
5. Remove position 5.1 by prying out with a screw driver inserted under the vanes.
6. Remove position 8.1, 8.2, 8.3, and 8.4 as an assembly by lifting on position 8.1 and by hand. In some cases it may be necessary to pry this out with a screwdriver inserted under the vanes of position 8.1
7. Remove position 8.2 using snap-ring pliers (see Figure 25 on page 24)
8. Remove position 8.1 from 8.4 by manually pulling position 8.1 from 8.4. On occasion, it may be necessary to tap position 8.4 from position 8.1.
9. Remove position 8.3 from 8.4.

Reassembly

1. Reverse the procedure described in the disassembly process above; and with the following observance:
   a) When reversing the disassembly method, the use of the drive shaft insertion tool is necessary in order to avoid damaging pos. numbers 32.3 and 32.5 as well as pos. 32.4. This is illustrated in Figure 10.
2. It is advised to include the use of Anti-Seize as described on page 6 when connecting position 1 to position 12.4.

Phone : 281.821.7300
Fax : 281.821.5550
Internet E-Mail : eng@butterworth.com
Web Site : www.butterworth.com

MAINTENANCE AND REPAIR

Top Assembly - Exploded View Drawing

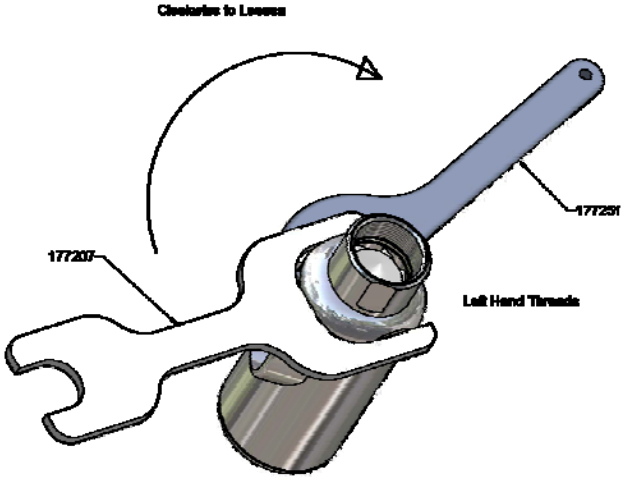

Figure 9

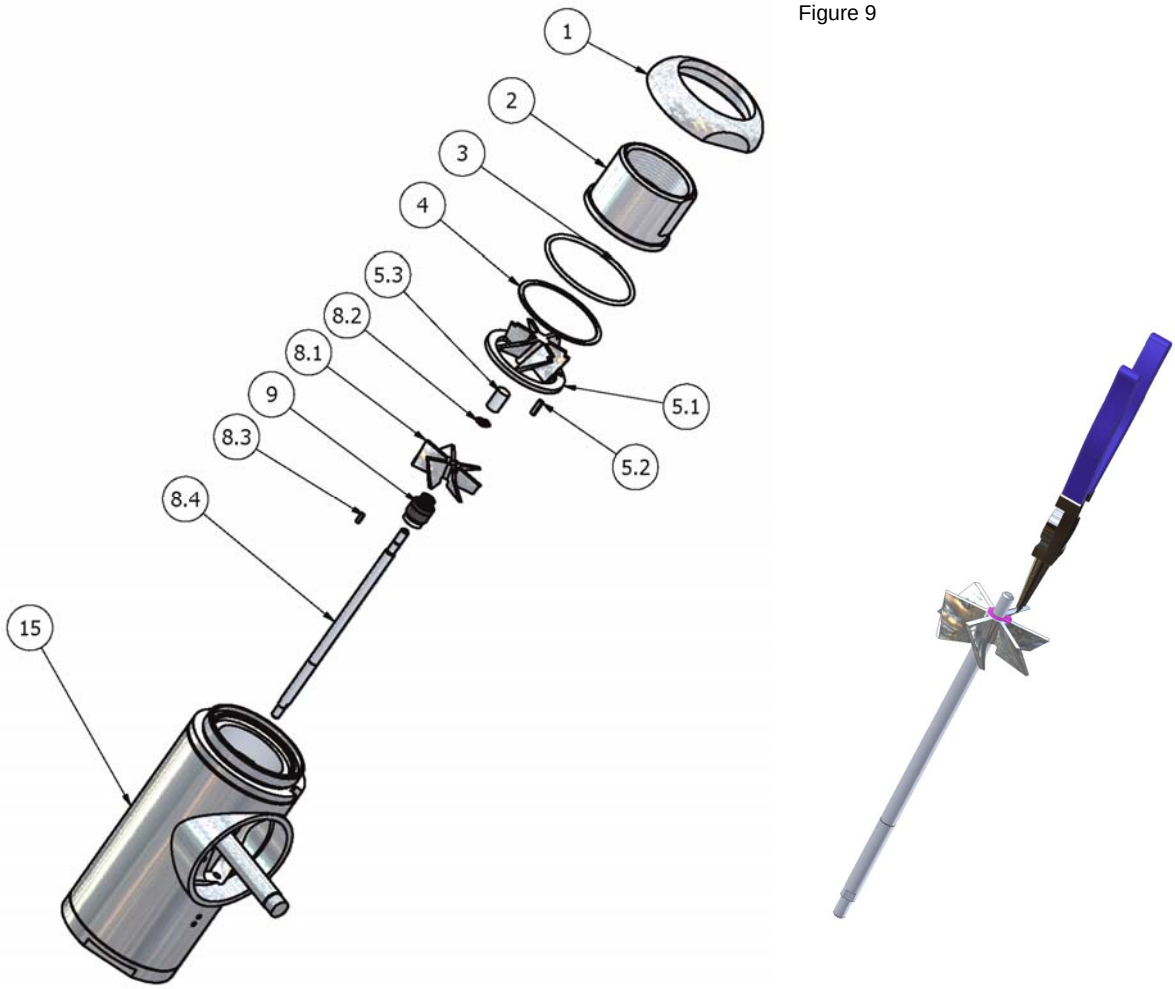

Figure 10

Phone : 281.821.7300
Fax : 281.821.5550
Internet E-Mail : eng@butterworth.com
Web Site : www.butterworth.com

MAINTENANCE AND REPAIR

Impeller housing sub-assembly

Disassembly

1. Remove position 10 using snap-ring pliers (see Figure 22).
2. Remove with needle nose pliers (see Figure 31) position 11 from position 12.
3. Remove position 12 from position 15 using two regular screwdrivers by prying position 12 from position 15 using the upper lip of position 15 as a pivot point or screw the screw cap; position 1 back on with inlet; position 2 and pull the impeller housing assembly; position 12 from the main body; position 15.
4. Remove position 13 from position 12.
5. Remove position 33 using needle nose pliers (see Figure 31) from position 32.2.
6. Using a punch (see Figure 24) remove position 12.5 by tapping position 12.5 with the punch and hammer driving inward.
7. On completion of step 5 above remove positions 12.6 from 12.1 along with removing positions 12.1, 12.2, and 12.3. These items should be removable by hand or with a small regular screwdriver.

Reassembly

1. Reverse the above procedure in the steps mentioned.

Phone : 281.821.7300
Fax : 281.821.5550
Internet E-Mail : eng@butterworth.com
Web Site : www.butterworth.com

MAINTENANCE AND REPAIR

Impeller housing sub-assembly - Drawing

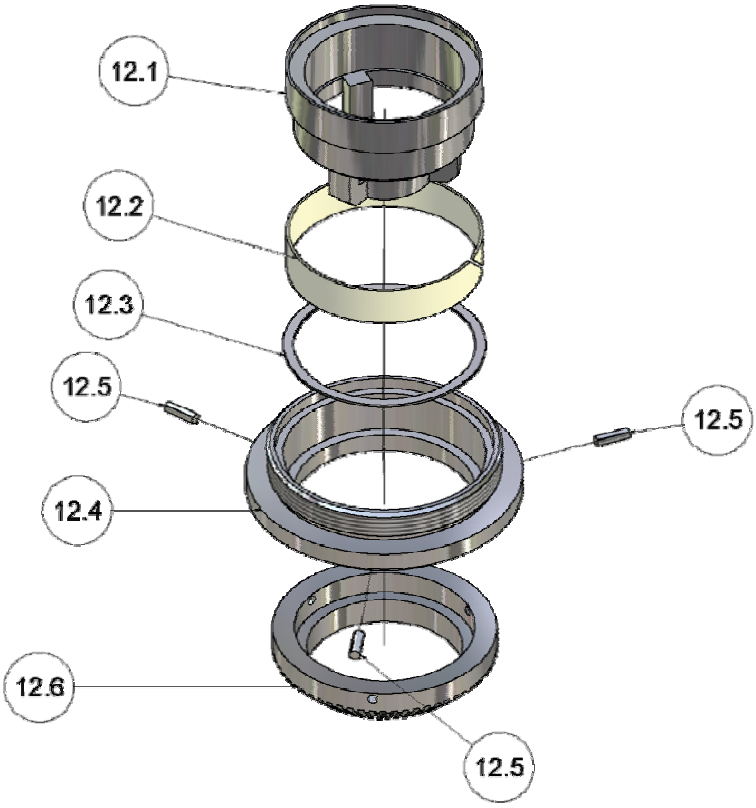

Figure 13

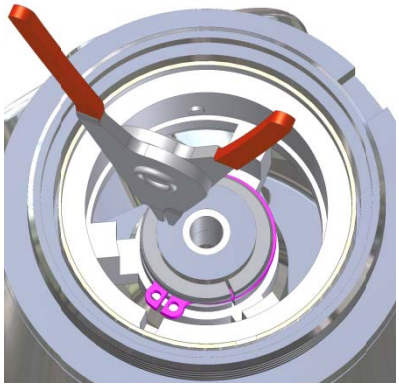

Figure 11

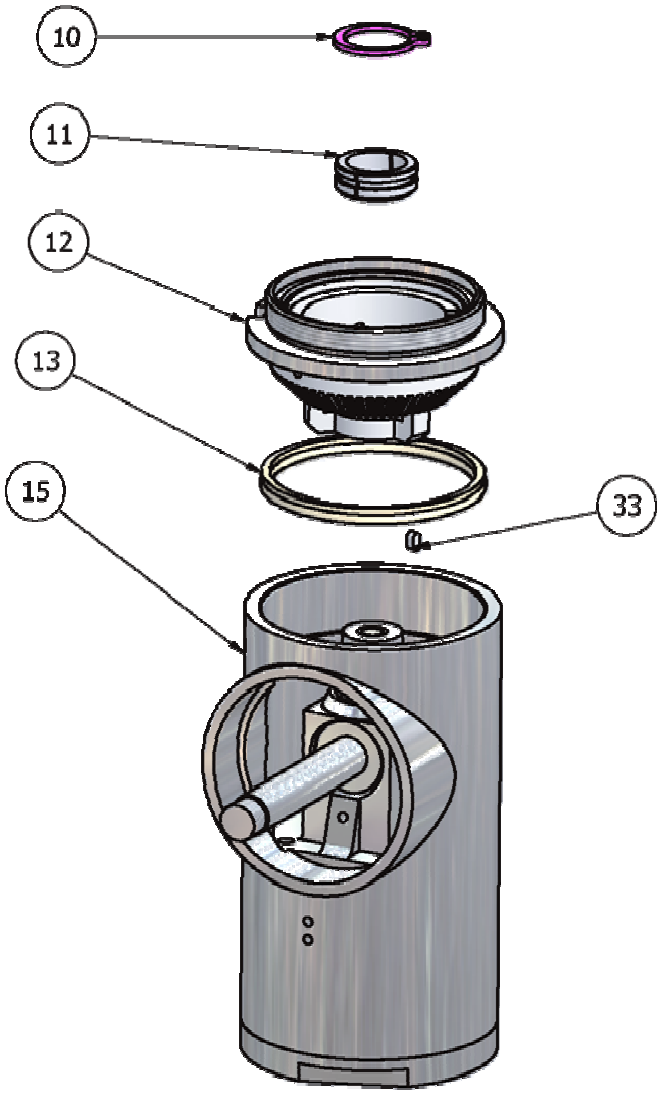

Figure 12

Phone : 281.821.7300
Fax : 281.821.5550
Internet E-Mail : eng@butterworth.com
Web Site : www.butterworth.com

MAINTENANCE AND REPAIR

Bottom Assembly

Disassembly

1. Invert body and place in vice (with soft jaws) and remove position 47.2 from position 15 by rotating position 47.2 clockwise (these are left-hand threads); using torque cap tool (see Figure 32). Alternately, you can use the spanner wrench (see Figure 26).
2. Remove position 8.5 from position 45 by hand or with needle nose pliers (see Figure 31).
3. Remove position 45 from position 42. This should come off by hand; but use of needle nose pliers as previously mentioned may be necessary.
4. Remove position 43 using snap-ring pliers (Figure 29) from position 32.2 and as shown in Figure 16.
5. Remove position 42 from position 32.2 using two regular screwdrivers and prying it loose from position 15, using the upper edge of position 15 as the pivot point.
6. Remove position 41 from inside of position 32.2
7. Remove position 32.2 from position 15.
8. To disassemble the main stem; position 32.2; remove pins; position 32.2b by punching the pins inward until they are free of position 32.2b. After this step, remove position 32.2c from 32.2b by tapping position 32.2b from 32.2c using a soft mallet and positioning position 32.2c in a vice on the lip of 32.2c.
9. Remove positions 32.1, and 32.6 by inserting a hooked probe past these positions and then pulling these positions out of position 32.2a.
10. Remove position 29 from position 15 by hand or with a punch by inverting position 15 and tapping on the ledge of position 29.

Reassembly

1. Reverse process as stated above with the additional observance of using a torque wrench as shown Figure 14 to attach position 41.3 to position 15.
2. See Figure 20 for gear alignment instructions when placing position 37 back into position 32.3.

Phone : 281.821.7300
Fax : 281.821.5550
Internet E-Mail : eng@butterworth.com
Web Site : www.butterworth.com

MAINTENANCE AND REPAIR

Bottom Assembly - Exploded View Drawing

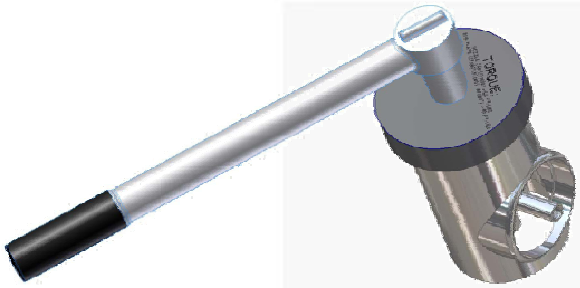

Figure 14

Note: This is a left-hand thread

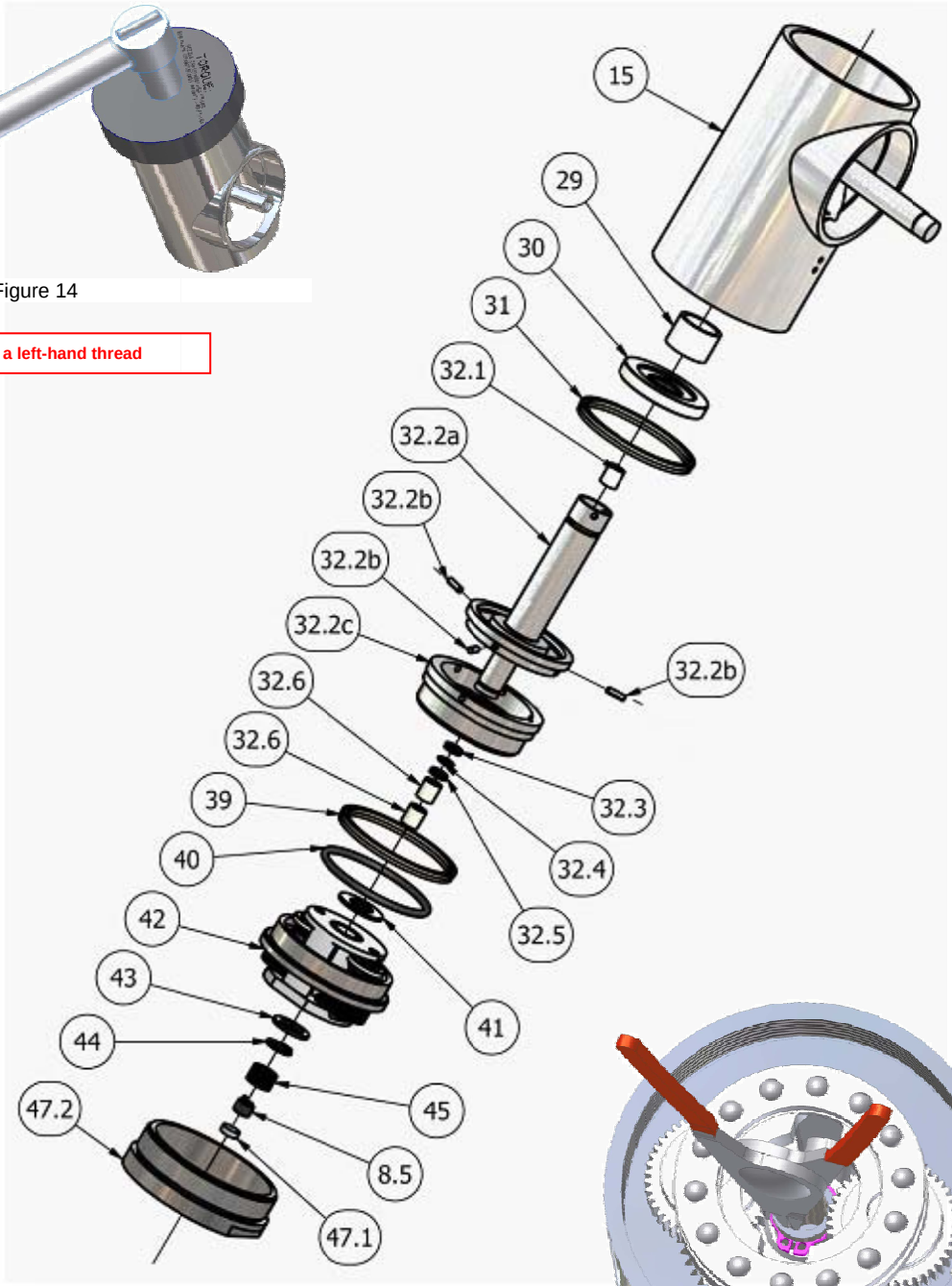

Figure 15

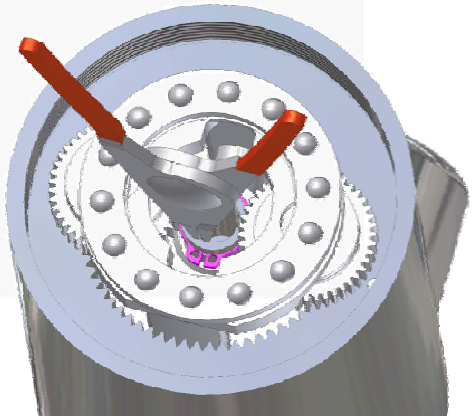

Figure 16

Phone : 281.821.7300
Fax : 281.821.5550
Internet E-Mail : eng@butterworth.com
Web Site : www.butterworth.com

MAINTENANCE AND REPAIR

Hub Sub-Assembly

Disassembly

1. Place the tank cleaning machine; horizontally and with nozzles facing upwards, in a vice using soft jaws. Note, this machine employs a clutched hub so some rotation is possible but do not force rotation.
2. Remove position 28 from position 15 using spanner wrench (see **Error! Reference source not found.**) and by turning counterclockwise (this is a right-hand thread) until removed; see Figure 17 for additional information.
3. Remove position 27; this should be loose and free.
4. Remove position 21 from 25.
5. Remove position 24 from 25 using tool in **Error! Reference source not found.**. Position 23 should remain within position 24; except for possible cleaning.
6. Remove position 20 from 21.
7. Remove position 19 by hand.
8. Remove position 17 from position 15 by hand.
9. Remove position 20 from 18 using a regular screwdriver or by hand.
10. Remove position 16 from position 15 by hand.

Reassembly

1. Reverse the above procedure and it is recommended that position 28 is affixed to position 15 using loctite 242.

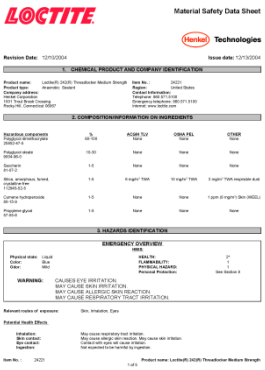
LOCTITE

Material Safety Data Sheet

Henkel Technologies

Revision Date: 12/13/2004 Issue date: 12/13/2004

1. CHEMICAL PRODUCT AND COMPANY IDENTIFICATION

2. COMPOSITION/INFORMATION ON INGREDIENTS

3. HAZARDS IDENTIFICATION

EMERGENCY OVERVIEW

WARNING: CAUSES EYE IRRITATION
MAY CAUSE SKIN IRRITATION
MAY CAUSE ALLERGIC SKIN REACTION
MAY CAUSE RESPIRATORY TRACT IRRITATION

Potential Health Effects

Product name: Loctite(R) 242(R) Threadlocker Medium Strength

1 of 5

Loctite Product Numbers:

24205: Threadlocker 242 Removable, 0.5ml capsule
24221: Threadlocker 242 Removable, 10ml bottle
24231: Threadlocker 242 Removable, 50 ml bottle

Phone : 281.821.7300
Fax : 281.821.5550
Internet E-Mail : eng@butterworth.com
Web Site : www.butterworth.com

MAINTENANCE AND REPAIR

Hub Sub-Assembly - Drawing

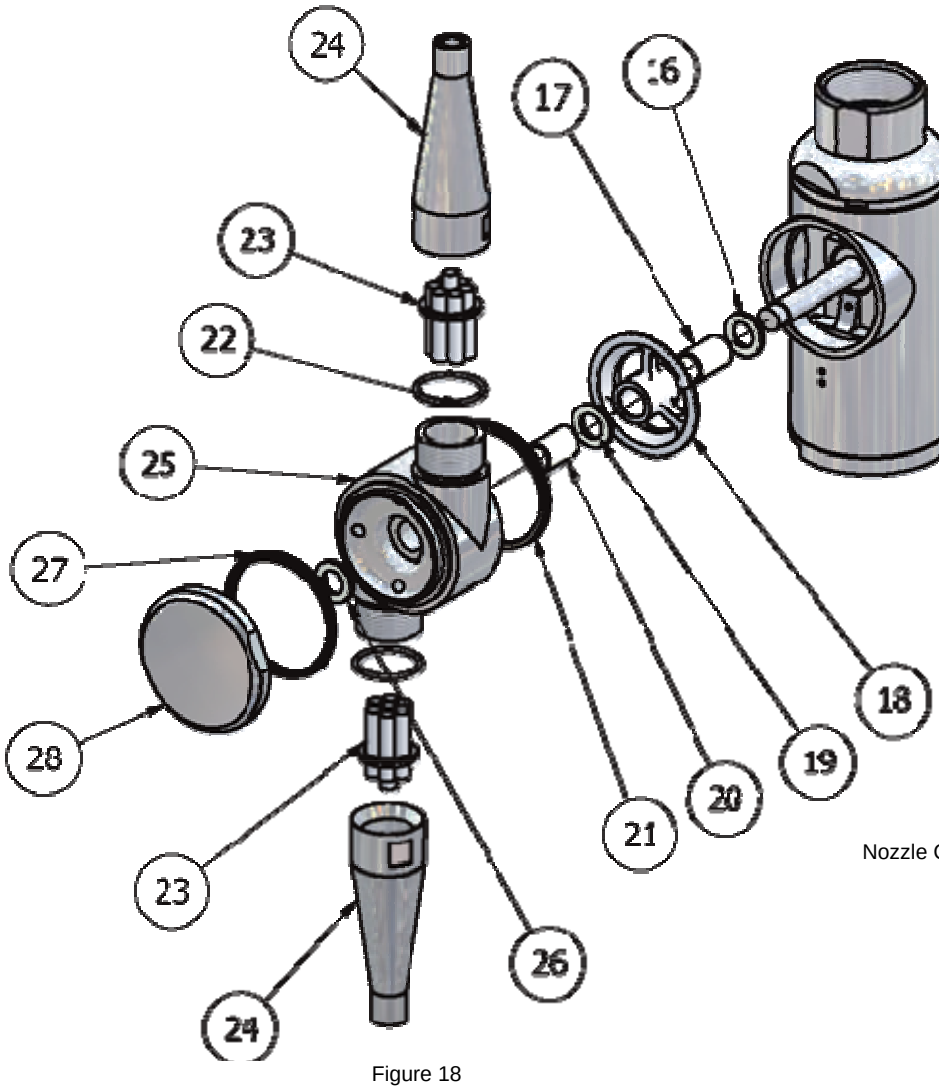

Figure 18

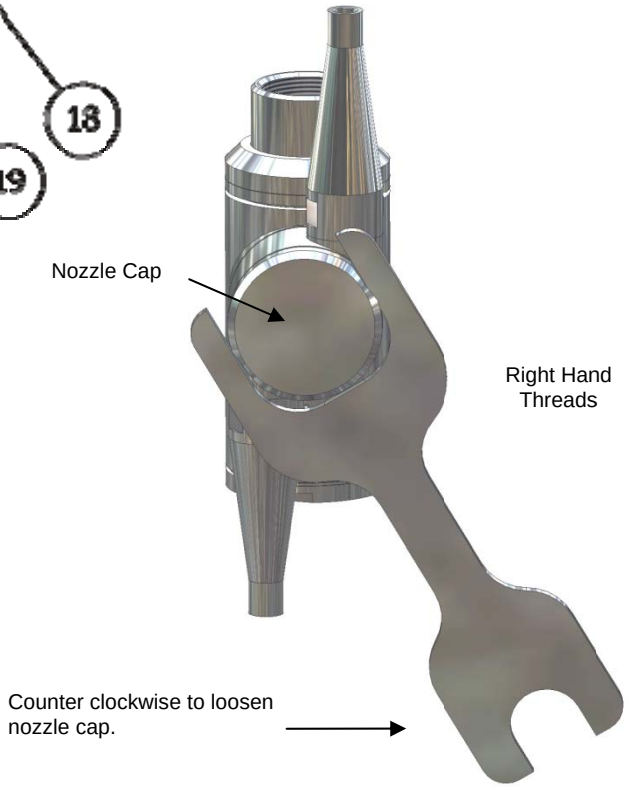

Figure 17

Phone : 281.821.7300
Fax : 281.821.5550
Internet E-Mail : eng@butterworth.com
Web Site : www.butterworth.com

MAINTENANCE AND REPAIR

Gearbox Sub-Assembly

Disassembly

1. Remove position 42.1 from position 47.
2. Remove position 42.8 from position 47 using tool in Figure 23.
3. Remove position 42.7 from position 47 using tool in Figure 23. Tap gently so as not to damage.
4. Remove 42.2 from 42.5 by hand.
5. Remove position 42.5 from position 47 by hand.
6. Remove by hand positions 42.6.
7. Position 42.5a is part of position 42.5 and sold/supplied as an assembly.

Reassembly

1. Reverse the above procedure and be sure to time the gears as indicated in Figure 20.
2. **Fill the gearbox cavity with lubricant; see page 35 for details on the lubricant specification.**

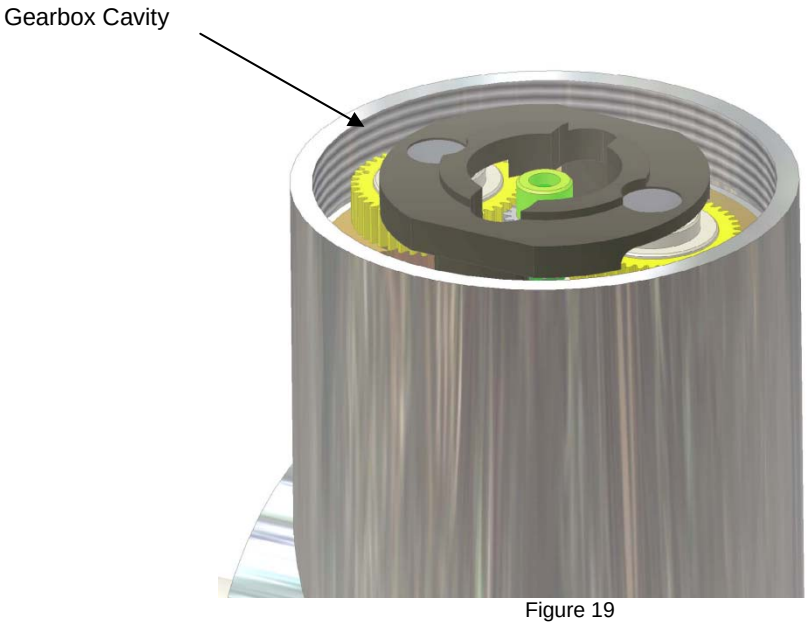

Figure 19

Phone : 281.821.7300
Fax : 281.821.5550
Internet E-Mail : eng@butterworth.com
Web Site : www.butterworth.com

MAINTENANCE AND REPAIR

Gearbox Sub-Assembly - Drawing

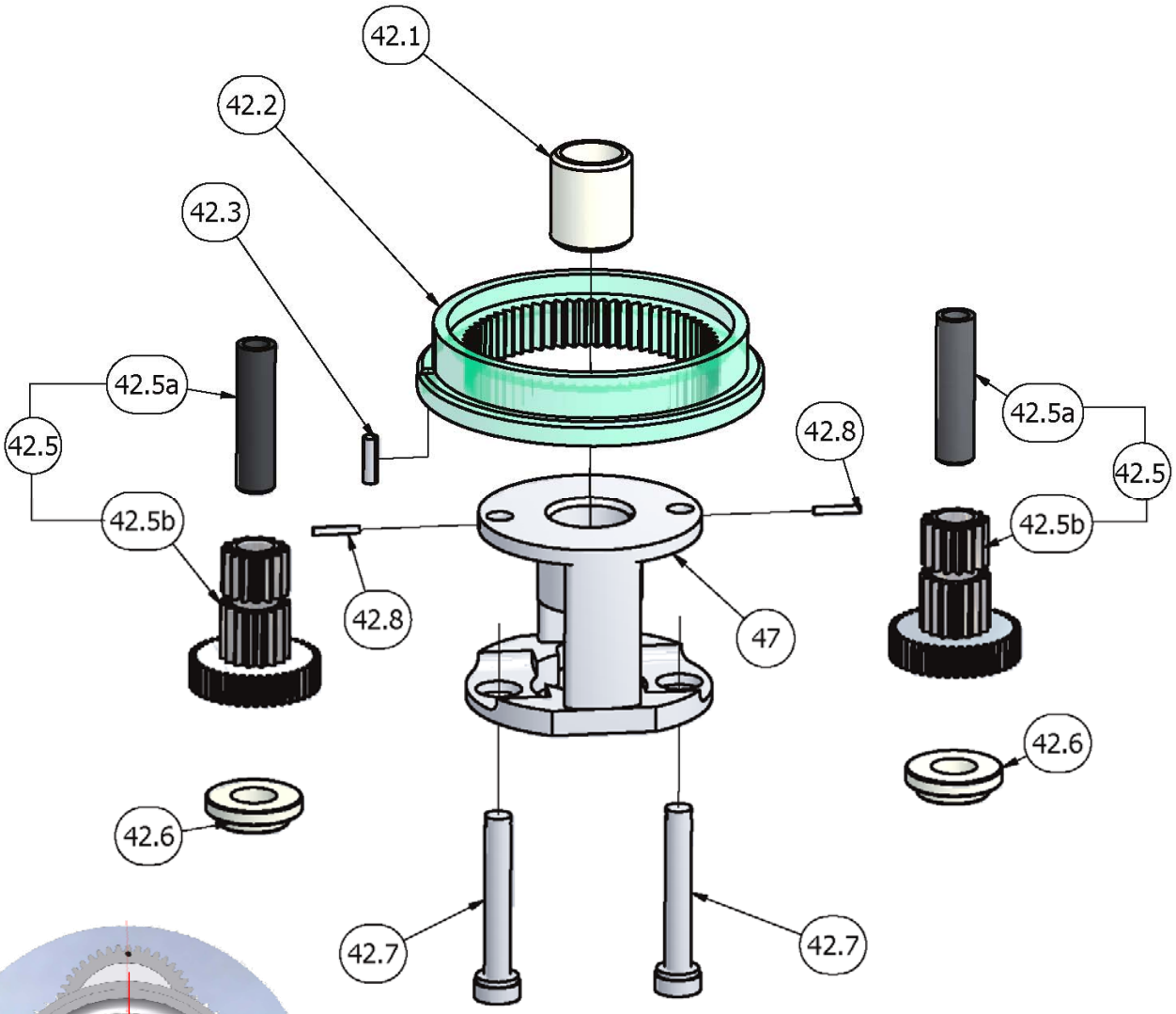

Figure 21

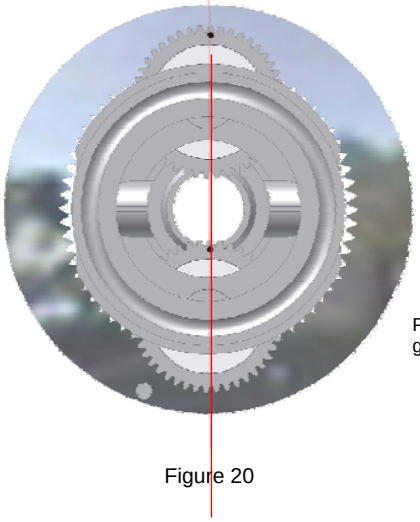

Planet gears should be aligned to the dots on the gears as indicated below on the red line.

Figure 20

Phone : 281.821.7300
Fax : 281.821.5550
Internet E-Mail : eng@butterworth.com
Web Site : www.butterworth.com

MAINTENANCE AND REPAIR

Tool Listing

LT Tool Kit Part Number: 5699

Consisting of:

1. 1 each 177207 Spanner Wrench; see Figure 26.
2. 1 each 177245 Circlip Pliers; not shown.
3. 1 each 177246 3mm Punch; see Figure 24.
4. 1 each 177247 1.5mm Punch; see Figure 23.
5. 1 each 177248 5mm Circlip pliers; straight nose; see Figure 25.
6. 1 each 177249 10-20mm Circlip pliers; see Figure 22.
7. 1 each 177250 Pointed nose pliers; see Figure 31.
8. 1 each 177251 3 inch hook spanner; see Figure 30.
9. 1 each 177254 3-10mm circlip pliers; straight nose; Figure 29.
10. 1 each 177255 Torque socket tool; see Figure 32.
11. 1 each 177227 Drive shaft insertion tool; see Figure 27
12. 1 each 177252 Seal insertion tool; see Figure 28
13. 1 each 177253 Main stem insertion tool; not shown

Phone : 281.821.7300
Fax : 281.821.5550
Internet E-Mail : eng@butterworth.com
Web Site : www.butterworth.com

TOOLS

Figure 26

Figure 25

Figure 24

Figure 23

Figure 22

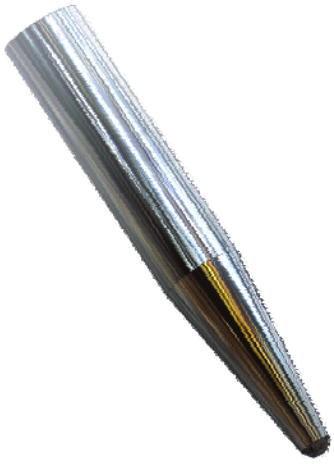

Figure 27

Phone : 281.821.7300
Fax : 281.821.5550
Internet E-Mail : eng@butterworth.com
Web Site : www.butterworth.com

TOOLS

Figure 28

Figure 30

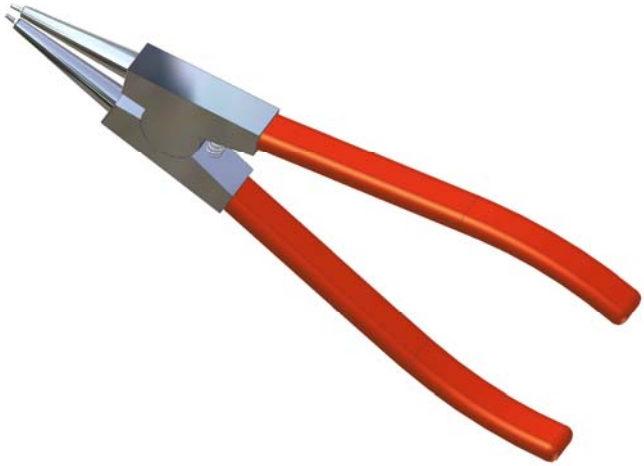

Figure 29

Figure 31

Figure 32

Phone : 281.821.7300
Fax : 281.821.5550
Internet E-Mail : eng@butterworth.com
Web Site : www.butterworth.com

TROUBLE SHOOTING GUIDE

Symptom: Tank cleaning machine will not rotate.

Possible causes are:

1. No or insufficient liquid flow
    a. Check fluid supply to insure that pressure and flow as per the operating curves are being observed. For this to be properly accomplished, you should install a pressure gauge as close to the machine inlet as possible. In any case the pressure gauge should not be any further from the tank cleaning machine than 15 feet.
2. Tank cleaning machine inlet is blocked.
    a. Check inlet of machine; (position 2); and insure that no debris or foreign matter is present. Remember that it was advised earlier in this manual to employ a 100 micron filter.
3. Tank cleaning nozzles are blocked.
    a. Remove the nozzles; (position 24) and check for any foreign matter. If present, remove and then replace nozzles.
4. Bevel gears are blocked.
    a. If foreign matter has entered the machine and passed through the body, it may have lodged itself in the bevel gears; position 12.6 and 17. To check these areas refer to Figure 18 for instructions on removal of the hub. Take care to review the gearing and ensure that there is no damage that could prevent operation.
5. Impeller rotation is restricted.
    a. If foreign matter has passed through the inlet and past the guide vane; (position 5.1) you would not be able to see that matter by looking into the inlet. To check for blockage here; see Figure 10 and disassemble as required to perform your inspection.
6. Gearbox rotation is restricted.
    a. If foreign matter has entered into this area; (position 37); to perform an inspection see Figure 14 and Figure 15 for disassembly instructions.
7. Worn parts; replacements required.
    a. After items 1-6 above have been checked; it may be necessary to replace parts due to normal wear associated with your type of operation. One of the best ways to determine the need to replace parts is a visual inspection of the primary wear parts as listed in the reference list of parts on page 27. Additionally, the working mechanism of the machine can be checked by rotating the impeller; (position 8.1). By rotating this position, the turbine shaft and various gearing within the tank cleaning machine is engaged. Rotation should be smooth and consistent. If that is not the case then parts replacement is most probably required.

Phone : 281.821.7300
Fax : 281.821.5550
Internet E-Mail : eng@butterworth.com
Web Site : www.butterworth.com

REFERENCE LIST OF PARTS

Version: LT-Master BOM-2006.04.18

Note: Shaded gray areas are variables for the LT, depending on your model number.

POS	QTY	√	PART NUMBER	DESCRIPTION	M.O.C.	STANDARD	WETTED	STATUS	CROSS REFERENCE	NOTE
1	1		177063	Screw cap	316 SS	ASTM A351-CF8M	Yes	Obsolete	577063	
		√	577063		316 SS	ASTM A351-CF8M	Yes	Standard	None	
2	1		572302-01	Inlet housing 1.5" NPS(F)	316 SS	ASTM A351-CF8M	Yes	Standard	None	
			177005	Inlet housing 1.5" BSP(F)	316 SS	ASTM A351-CF8M	Yes	Standard	None	
			272302	Inlet housing 1.5" NPT(F)	316 SS	ASTM A351-CF8M	Yes	Standard	None	
			477005	Inlet housing 1.5" BSP(M)	316 SS	ASTM A351-CF8M	Yes	Standard	None	
			472302	Inlet housing 1.5" NPT(M)	316 SS	ASTM A351-CF8M	Yes	Standard	None	
3	1	√	177041	Inlet o-ring	PTFE	Contact Butterworth	Yes	Standard	None	
			177041-01		Buna-N	ASTM D1418	Yes	Non standard	None	
			177041-02		Viton	Contact Butterworth	Yes	Non standard	None	
4			177066	Washer	Monel	ASTM A494-M35-2	Yes	Obsolete	177066-01	
		√	177066-01		316 SS	ASTM A351-CF8M	Yes	Standard	None	
5	1		5664	Guide vane assembly; type 4	See individual parts	See individual parts	Yes	Standard	None	
			5664-01	Guide vane assembly; type 4; ver. 01	See individual parts	See individual parts	Yes	Non Standard	None	
			5664-02	Guide vane assembly; type 4; ver. 02	See individual parts	See individual parts	Yes	Non Standard	None	
			5660	Guide vane assembly; type 3	See individual parts	See individual parts	Yes	Standard	None	
			5660-01	Guide vane assembly; type 3; ver. 01	See individual parts	See individual parts	Yes	Non Standard	None	
			5660-02	Guide vane assembly; type 3; ver. 02	See individual parts	See individual parts	Yes	Non Standard	None	
			5661	Guide vane assembly; type 2	See individual parts	See individual parts	Yes	Standard	None	
			5661-01	Guide vane assembly; type 2; ver. 01	See individual parts	See individual parts	Yes	Non Standard	None	
			5661-02	Guide vane assembly; type 2; ver. 02	See individual parts	See individual parts	Yes	Non Standard	None	
			6664	Guide vane assembly; type 1	See individual parts	See individual parts	Yes	Standard	None	
			6664-01	Guide vane assembly; type 1; ver. 01	See individual parts	See individual parts	Yes	Non Standard	None	
			6664-02	Guide vane assembly; type 1; ver. 02	See individual parts	See individual parts	Yes	Non Standard	None	
			5662	Guide vane assembly; type M	See individual parts	See individual parts	Yes	Standard	None	
			5662-01	Guide vane assembly; type M; ver. 01	See individual parts	See individual parts	Yes	Non Standard	None	
			5662-02	Guide vane assembly; type M; ver. 02	See individual parts	See individual parts	Yes	Non standard	None	
5.1	1		177022	Guide vane, Type 2	316 SS	ASTM A351-CF8M	Yes	Standard	None	
			177023	Guide vane, Type 3	316 SS	ASTM A351-CF8M	Yes	Standard	None	
			177104	Guide vane, Type M	316 SS	ASTM A351-CF8M	Yes	Standard	None	
			577104	Guide vane, Type 4	316 SS	ASTM A351-CF8M	Yes	Standard	None	
			677022-00	Guide vane, Type 1	316 SS	ASTM A351-CF8M	Yes	Standard	None	
5.2	1	√	177034	Groove pin	316 SS	ASTM A351-CF8M	Yes	Standard	None	
5.3	1	√	177033	Top drive shaft bushing	10% Ekanol PTFE	Contact Butterworth	Yes	Standard	None	
			177033-01	Top drive shaft bushing	Mineral filled PTFE	Contact Butterworth	Yes	Non standard	None	
			177033-02	Top drive shaft bushing	UHMW	Contact Butterworth	Yes	Non standard	None	
8	1		5668	Impeller shaft assembly, Low Flow	See individual parts	See individual parts	Yes	Obsolete	8668	
			5663	Impeller shaft assembly	See individual parts	See individual parts	Yes	Obsolete	8663	
			8668	Impeller shaft assembly; type 3	See individual parts	See individual parts	Yes	Standard	None	
			8668-02	Impeller shaft assembly; type 3; ver. 02	See individual parts	See individual parts	Yes	Non standard	None	
			8663	Impeller shaft assembly; type 1	See individual parts	See individual parts	Yes	Standard	None	
			8663-02	Impeller shaft assembly; type 1; ver. 02	See individual parts	See individual parts	Yes	Non standard	None	

Phone : 281.821.7300
Fax : 281.821.5550
Internet E-Mail : eng@butterworth.com
Web Site : www.butterworth.com

REFERENCE LIST OF PARTS

Version: LT-Master BOM-2006.04.18

Note: Shaded gray areas are variables for the LT, depending on your model number.

POS	QTY	√	PART NUMBER	DESCRIPTION	M.O.C.	STANDARD	WETTED	STATUS	CROSS REFERENCE	NOTE
8.1	1		177106	Impeller, Type 3	316 SS	ASTM A351-CF8M	Yes	Obsolete	477106	
			177021	Impeller, Type 1	316 SS	ASTM A351-CF8M	Yes	Obsolete	477021	
			477106	Impeller, Type 3	316 SS	ASTM A351-CF8M	Yes	Standard	None	
			477021	Impeller, Type 1	316 SS	ASTM A351-CF8M	Yes	Standard	None	
8.2	1	√	270504	Impeller circlip	316 SS	ASTM A351-CF8M	Yes	Standard	None	
8.3	1	√	170541	Shaft key	316 SS	ASTM A351-CF8M	Yes	Standard	None	
8.4	1		177011	Shaft	17-4ph SS	ASTM A747-CCB7CU-1	Yes	Obsolete	477011	
		√	477011		17-4ph SS	ASTM A747-CCB7CU-1	Yes	Standard	None	
8.5	1	√	477044-01	Thrust pad	Carbon filled PEEK w/PTFE	Contact Butterworth	Yes	Standard	None	
			477044-02		Tungsten Carbide	Contact Butterworth	Yes	Non standard	None	
9	1	√	270832	Mechanical seal	Carbon,ceramic,elgiloy & viton	Contact Butterworth	Yes	Standard	None	
10	1	√	277603	Circlip	316 SS	ASTM A351-CF8M	Yes	Standard	None	
11	2	√	277604	H Retainer	17-4ph SS	ASTM A747-CCB7CU-1	Yes	Standard	None	
12	1	√	5667	Impeller housing assembly	See individual parts	See individual parts	Yes	Standard	None	
12.1	1	√	277602	Impeller housing	CD-4MCU Duplex SS	ASTM A744, A890	Yes	Standard	None	
12.2	1	√	177067	Strip	PTFE	Contact Butterworth	Yes	Standard	None	
			177067-02		UHMW	Contact Butterworth	Yes	Non standard	None	
12.3	1		177066	Washer	Monel	ASTM A494-M35-2	Yes	Obsolete	177066-01	
		√	177066-01		316 SS	ASTM A351-CF8M	Yes	Standard	None	
12.4	1	√	177062	Inlet Ring	316 SS	ASTM A351-CF8M	Yes	Standard	None	
12.5	3	√	177034	Groove pin	316 SS	ASTM A351-CF8M	Yes	Standard	None	
12.6	1		177007	Body bevel gear	317 SS	ASTM A296-CG8M	Yes	Non standard	None	
		√	177007-01		17-4ph SS	ASTM A747-CCB7CU-1	Yes	Standard	None	
13	1	√	177038	Rotary seal	Elgiloy,10% Ekanol PTFE	Contact Butterworth	Yes	Standard	None	
			177038-01		Elgiloy,Mineral filled PTFE	Contact Butterworth	Yes	Non standard	None	
			177038-02		Elgiloy,UHMW	Contact Butterworth	Yes	Non standard	None	
14	1	√	177025	Main stem bushing	10% Ekanol PTFE	Contact Butterworth	Yes	Standard	None	
			177025-01		Mineral filled PTFE	Contact Butterworth	Yes	Non standard	None	
			177025-02		UHMW	Contact Butterworth	Yes	Non standard	None	
15	1	√	570801-01	Main Body	CD-4MCU Duplex SS	ASTM A744, A890	Yes	Standard	None	
16	1	√	477032	Nozzle thrust pad	10% Ekanol PTFE	Contact Butterworth	Yes	Standard	None	
			477032-01		Mineral filled PTFE	Contact Butterworth	Yes	Non standard	None	
			477032N-02		UHMW	Contact Butterworth	Yes	Non standard	None	
			177032		10% Ekanol PTFE	Contact Butterworth	Yes	Non standard	477032	
			177032-01		Mineral filled PTFE	Contact Butterworth	Yes	Non Standard	None	
			177032-02		UHMW	Contact Butterworth	Yes	Non Standard	None	
17	1	√	477027	Nozzle bushing	10% Ekanol PTFE	Contact Butterworth	Yes	Standard	None	
			477027-01		Mineral filled PTFE	Contact Butterworth	Yes	Non standard	None	
			477027-02		UHMW	Contact Butterworth	Yes	Non standard	None	
			177027		10% Ekanol PTFE	Contact Butterworth	Yes	Non standard	None	
			177027-01		Mineral filled PTFE	Contact Butterworth	Yes	Non standard	None	
			177027-02		UHMW	Contact Butterworth	Yes	Non standard	None	
18	1		177008	Nozzle bevel gear	316 SS	ASTM A351-CF8M	Yes	Non standard	None	
		√	177008-01		17-4ph SS	ASTM A747-CCB7CU-1	Yes	Standard	None	

Phone : 281.821.7300
Fax : 281.821.5550
Internet E-Mail : eng@butterworth.com
Web Site : www.butterworth.com

REFERENCE LIST OF PARTS

Note: Shaded gray areas are variables for the LT, depending on your model number.

Version: LT-Master BOM-2006.04.18

POS	QTY	√	PART NUMBER	DESCRIPTION	M.O.C	STANDARD	WETTED	STATUS	CROSS REFERENCE	NOTE
19	1	√	477032	Nozzle thrust pad	10% Ekanol PTFE	Contact Butterworth	Yes	Standard	None	
			477032-01		Mineral filled PTFE	Contact Butterworth	Yes	Non standard	None	
			477032N-02		UHMW	Contact Butterworth	Yes	Non standard	None	
			177032		10% Ekanol PTFE	Contact Butterworth	Yes	Non standard	477032	
			177032-01		Mineral filled PTFE	Contact Butterworth	Yes	Non Standard	None	
			177032-02		UHMW	Contact Butterworth	Yes	Non Standard	None	
20	1	√	477027	Nozzle bushing	10% Ekanol PTFE	Contact Butterworth	Yes	Standard	None	
			477027-01		Mineral filled PTFE	Contact Butterworth	Yes	Non standard	None	
			477027-02		UHMW	Contact Butterworth	Yes	Non standard	None	
			177027		10% Ekanol PTFE	Contact Butterworth	Yes	Non standard	None	
			177027-01		Mineral filled PTFE	Contact Butterworth	Yes	Non standard	None	
			177027-02		UHMW	Contact Butterworth	Yes	Non standard	None	
21	1	√	177039	Rotary seal	Elgiloy,10% Ekanol PTFE	Contact Butterworth	Yes	Standard	None	
			177039-01		Elgiloy,Mineral filled PTFE	Contact Butterworth	Yes	Non standard	None	
			177039-02		Elgiloy,UHMW	Contact Butterworth	Yes	Non standard	None	
22	2	√	270834	Nozzle o-ring	PTFE	Contact Butterworth	Yes	Standard	None	
			177071		EDPM	Contact Butterworth	Yes	Non standard	None	
23	2	√	177018	Stream straightener	316 SS	ASTM A351-CF8M	Yes	Standard	None	
24	2		177061	Nozzle Tip 6MM	316 SS	ASTM A351-CF8M	Yes	Standard	None	
			177060	Nozzle Tip 8MM	316 SS	ASTM A351-CF8M	Yes	Standard	None	
			177059	Nozzle Tip 10MM	316 SS	ASTM A351-CF8M	Yes	Standard	None	
			177058	Nozzle Tip 12MM	316 SS	ASTM A351-CF8M	Yes	Standard	None	
25	1	√	177002	Nozzle body	316 SS	ASTM A351-CF8M	Yes	Standard	None	
26	1	√	477032	Nozzle thrust pad	10% Ekanol PTFE	Contact Butterworth	Yes	Standard	None	
			477032-01		Mineral filled PTFE	Contact Butterworth	Yes	Non standard	None	
			477032-02		UHMW	Contact Butterworth	Yes	Non standard	None	
			177032		10% Ekanol PTFE	Contact Butterworth	Yes	Non standard	477032	
			177032-01		Mineral filled PTFE	Contact Butterworth	Yes	Non Standard	None	
			177032-02		UHMW	Contact Butterworth	Yes	Non Standard	None	
27	1	√	177039	Rotary seal	Elgiloy,10% Ekanol PTFE	Contact Butterworth	Yes	Standard	None	
			177039-01		Elgiloy,Mineral filled PTFE	Contact Butterworth	Yes	Non standard	None	
			177039-02		Elgiloy,UHMW	Contact Butterworth	Yes	Non standard	None	
28	1	√	477019	Nozzle cap	316 SS	ASTM A351-CF8M	Yes	Standard	None	
			177019		316 SS	ASTM A351-CF8M	Yes	Obsolete	477019	
29	1	√	177025	Main stem bushing	10% Ekanol PTFE	Contact Butterworth	Yes	Standard	None	
			177025-01		Mineral filled PTFE	Contact Butterworth	Yes	Non standard	None	
			177025-02		UHMW	Contact Butterworth	Yes	Non standard	None	
30	1	√	477029	Main Stem Thrust Washer	10% Ekanol PTFE	Contact Butterworth	Yes	Standard	None	
31	1	√	177039	Rotary seal	Elgiloy,10% Ekanol PTFE	Contact Butterworth	Yes	Standard	None	
			177039-01		Elgiloy,Mineral filled PTFE	Contact Butterworth	Yes	Non standard	None	
			177039-02		Elgiloy,UHMW	Contact Butterworth	Yes	Non standard	None	

Phone : 281.821.7300
Fax : 281.821.5550
Internet E-Mail : eng@butterworth.com
Web Site : www.butterworth.com

REFERENCE LIST OF PARTS

Note: Shaded gray areas are variables for the LT, depending on your model number.

Version: LT-Master BOM-2006.04.18

POS	QTY	√	PART NUMBER	DESCRIPTION	M.O.C.	STANDARD	WETTED	STATUS	CROSS REFERENCE	NOTE
32	1	√	8666	Main Stem Assembly	See individual parts	See individual parts	Yes	Standard	None	
32.1	1	√	177024	Drive shaft bushing	10% Ekanol PTFE	Contact Butterworth	Yes	Standard	None	
			177024-01		Mineral filled PTFE	Contact Butterworth	Yes	Non standard	None	
			177024-02		UHMW	Contact Butterworth	Yes	Non standard	None	
32.2a	1	√	477600	Main Stem Shaft	316 SS	ASTM A351-CF8M	Yes	Standard	None	
32.2b	3	√	177034	Pin	316 SS	ASTM A351-CF8M	Yes	Standard	None	
32.2c	1		477601	Main Stem Gear	17-4ph SS	ASTM A747-CCB7U-1	Yes	Standard	None	
		√	477601-01		CD-4MCU Duplex SS	ASTM A744, A890	Yes	Standard	None	
32.3	1	√	270823	Rotary seal	Elgiloy,10% Ekanol PTFE	Contact Butterworth	No	Standard	None	
32.4	1	√	177068	Impeller shaft o-ring	Buna-N	ASTM D1418	No	Standard	None	
32.5	1	√	270823	Rotary seal	Elgiloy,10% Ekanol PTFE	Contact Butterworth	No	Standard	None	
32.6	2	√	177024	Drive shaft bushing	10% Ekanol PTFE	Contact Butterworth	Yes	Standard	None	
			177024-01		Mineral filled PTFE	Contact Butterworth	Yes	Non standard	None	
			177024-02		UHMW	Contact Butterworth	Yes	Non standard	None	
33	1	√	272604	Key, 3 mm	316 SS	ASTM A351-CF8M	Yes	Standard		
39	1	√	177039	Rotary seal	Elgiloy,10% Ekanol PTFE	Contact Butterworth	Yes	Standard	None	
			177039-01		Elgiloy,Mineral filled PTFE	Contact Butterworth	Yes	Non standard	None	
			177039-02		Elgiloy,UHMW	Contact Butterworth	Yes	Non standard	None	
40	1	√	177065	Main stem o-ring	Buna-N	ASTM D1418	No	Standard	None	
41	1	√	177030	Carrier thrust pad	10% Ekanol PTFE	Contact Butterworth	Yes	Standard	None	
			177030-01		Mineral filled PTFE	Contact Butterworth	Yes	Non standard	None	
			177030-02		UHMW	Contact Butterworth	Yes	Non standard	None	
42	1	√	8665	Gearbox assembly	See individual parts	See Indv. Parts	No	Standard	None	
42.1	1	√	177026	Carrier bushing	10% Ekanol PTFE	Contact Butterworth	Yes	Standard	None	
			177026-01		Mineral filled PTFE	Contact Butterworth	Yes	Non standard	None	
			177026-02		UHMW	Contact Butterworth	Yes	Non standard	None	
42.2	1	√	370302	Internal Gear	316 SS	ASTM A351-CF8M	No	Standard	None	
42.3	1	√	177034	Groove pin	316 SS	ASTM A351-CF8M	No	Standard	None	
42.4	1	√	377009	Carrier	316 SS	ASTM A351-CF8M	No	Standard	None	
42.5	2	√	7659	Planet Gear Assembly	See individual parts	See Indv. Parts	No	Standard	None	
42.5a	2	√	177028	Planet gear bushing	Carbon filled PEEK w/PTFE	Contact Butterworth	Yes	Standard	None	
			177028-02	Planet gear bushing	Carbon filled PEEK	Contact Butterworth	Yes	Non standard	None	
42.5b	2	√	7659A	Planet Gear	17-4ph SS	ASTM A747-CCB7CU-1	No	Standard	None	
		√	377014	Planet Gear			No	Standard	None	
		√	377102	Star Gear			No	Standard	None	
42.6	2	√	477706	Planet Washer	10% Ekanol PTFE	Contact Butterworth	Yes	Standard	None	
42.7	2	√	377020-02	Gear Shaft	17-4ph SS	ASTM A747-CCB7CU-1	No	Standard	None	
42.8	2	√	270506	Groove pin	316 SS	ASTM A351-CF8M	No	Standard	None	
43	1	√	177074	Space Pad	316 SS	ASTM A351-CF8M	No	Standard	None	
44	1	√	177035	Gearbox retainer Ring	316 SS	ASTM A351-CF8M	No	Standard	None	
45	1	√	377101	Drive Gear	17-4ph SS	ASTM A747-CCB7CU-1	No	Standard	None	

Phone : 281.821.7300
Fax : 281.821.5550
Internet E-Mail : eng@butterworth.com
Web Site : www.butterworth.com

REFERENCE LIST OF PARTS

Note: Shaded gray areas are variables for the LT, depending on your model number.

Version: LT-Master BOM-2008.01.03

POS	QTY	√	PART NUMBER	DESCRIPTION	M.O.C.	STANDARD	WETTED	STATUS	CROSS REFERENCE	NOTE
47	1	√	7657-01	End Plate Assembly	See individual parts	See individual parts	No	Standard	None	
47.1	1		177044	End Plate Thrust Pad	Tungsten Carbide	Contact Butterworth	No	Non standard	None	
		√	177044-01		MP35N	ASTM F562	No	Standard	None	
47.2		√	370807-01	End Plate	316 SS	ASTM A351-CF8M	No	Standard	None	

Phone : 281.821.7300
Fax : 281.821.5550
Internet E-Mail : eng@butterworth.com
Web Site : www.butterworth.com

EXPLODED VIEW DRAWING

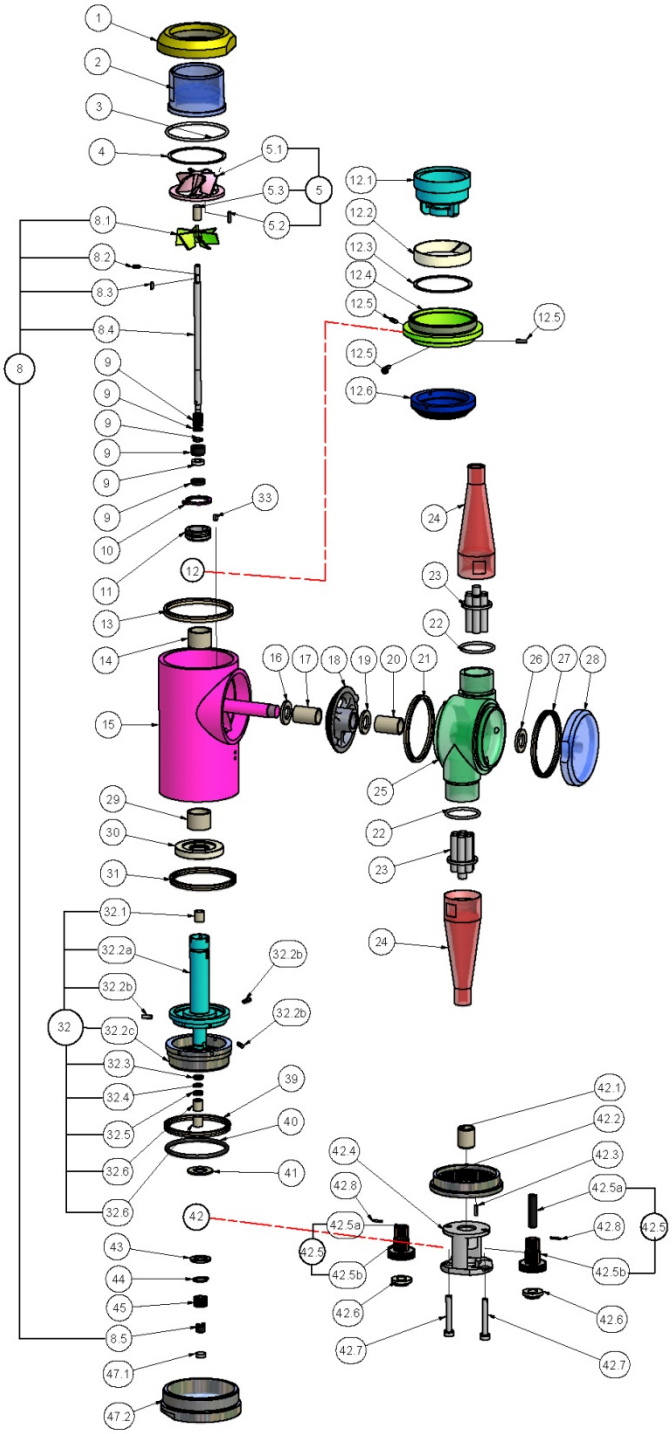

+

Figure 33

Phone : 281.821.7300
Fax : 281.821.5550
Internet E-Mail : eng@butterworth.com
Web Site : www.butterworth.com

CROSSECTIONAL DRAWING

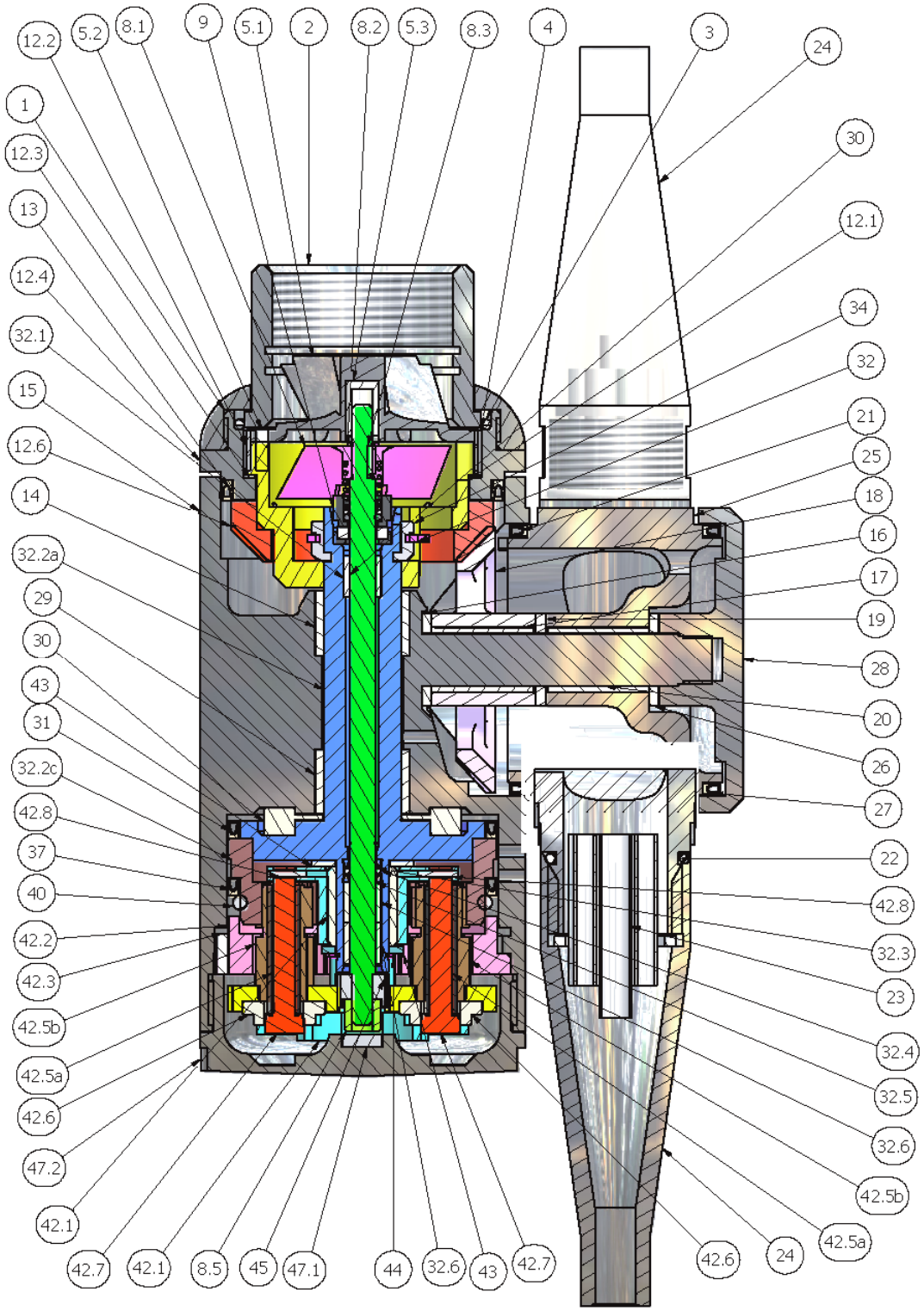

Figure 34

Phone : 281.821.7300
Fax : 281.821.5550
Internet E-Mail : eng@butterworth.com
Web Site : www.butterworth.com

STANDARD SPARE PART KIT

Spare Part Kit Number: LTSPK-LT-300

Recommended at ≤ 400 hours of operation.

Position	Part No.	Description	Quantity
8.3	170541	Key; 2mm x 2mm x 6mm	1
32.1; 32.6(2)	177024	Drive shaft bushing	3
17; 20	477027	Nozzle bearing	2
32.2b(3); 42.3; 12.5(3); 5.2	177034	Pin	8
44	177035	Circlip; external	1
13	177038	Rotary seal	1
21; 27; 31; 39	177039	Rotary seal	4
8.2	270504	Circlip	2
42.8	270506	Groove pin type B	4
33	272604	Key; 3mm x 3mm x 6mm	1
9	270832	Mechanical seal	1
32.3; 32.5	270823	Rotary seal	2
32.4	177068	O-ring	1
None	500313	Lubricant	1

Note: It is recommended that you purchase our tool kit, part number 5699 located on page 23. The shaft insertion tool is required to install this tool kit and can be seen in Figure 28 on page 25

Spare Part Kit / Gears: LTSPK-LT-G

Recommended at ≤ 1200 hours of operation.

Position	Part No.	Description	Quantity
45	377101	Drive gear	1
42.2	370302	Ring gear	1
42.5	7659	Planet gear assembly	2
12.6	177007	Bevel gear (65)	1
18	177008	Bevel gear (63)	1

It is suggested that you possess the correct tools before performing repairs on the LT machine. For a list of tools and tool kit part number see page 24.

LUBRICANT SPECIFICATION

Spare Part Number: 500313

Mobilgrease® FM102 is the preferred/standard lubricated used within the sealed gearbox of the LT machine as of the time of this writing. Equivalents are optional; as long as they meet the required specifications. Deviations from this equivalent could serve to invalidate the warranty period. For a complete data sheet and MSDS on Mobilgrease® FM102; contact Butterworth.

Mobilgrease® FM 101 and FM 102

Grease

Product Description

Mobilgrease FM 101 and FM 102 are extra high performance multi-purpose products designed specifically for the lubrication of food machinery. These leading edge products are aluminium complex-thickened and use special mineral base oils required for products with potential incidental food contact. They are formulated to provide superior performance in the lubrication of bearings and industrial equipment and provide superior protection against wear, good corrosion resistance and will withstand routine water emersion. They also provide good low temperature pumpability and the two grades are suitable for regular duty to 175º C. Mobilgrease FM 101 and FM 102 are NLGI Grade 1 and 2 respectively.

Mobilgrease FM 101 and FM 102 are designed to replace conventional lithium and synthetic greases in moderate and high temperature applications in food plants and sanitary equipment. Based on their benefits of performance and multi-purpose application for food and sanitary operations, these greases are the products of choice for many users, worldwide.

Features & Benefits

Mobilgrease FM 101 and FM 102 are members of the Mobilgrease brand of greases that enjoys a strong reputation for performance excellence even under arduous conditions. Mobilgrease FM 101 and FM 102 provide superior performance in a wide variety of food and sanitary applications and offer the following features and potential benefits:

Features	Advantages and Potential Benefits
Meet FDA and USDA requirements for incidental food contact lubricants	Specifically designed to provide safe and reliable performance in food and related industries
Extended lubricant life at high temperature	Extended re-greasing intervals and long product life
Excellent water tolerance	Withstands routine water immersion and maintains high level of grease performance
Good protection against corrosion	Extends equipment life, avoids un-planned downtime
Good low temperature pumpability	Easier low temperature start-up; remote location capability
Balanced performance for a wide variety of industrial equipment	Multipurpose use reduces inventory requirements

ExxonMobil Lubricants & Specialties
All products may not be available locally. For more information, contact your local sales office or visit www.exxonmobil.com.
ExxonMobil is comprised of numerous affiliates and subsidiaries, many with names that include Esso, Mobil, or ExxonMobil. Nothing in this document is intended to override or supersede the corporate separateness of local entities. Responsibility for local action and accountability remains with the local ExxonMobil-affiliate entities. Due to continual product research and development, the information contained herein is subject to change without notification. Typical Properties may vary slightly.
© 2001 Exxon Mobil Corporation. All rights reserved.

HOW TO ORDER SPARE PARTS AND WARRANTY CLAIM PROCEDURE

Ordering Spare Parts

To order spare parts, you will need to identify the serial number of your tank cleaning machine and correlate that to the manual that was issued at the time of purchase. The parts that were used to construct your machine will be indicated by a √ in the √ column of the reference list of parts beginning on page 27. If you are unable to find the manuals issued at the time of purchase, you can call the Butterworth® Sales desk and give them your machine serial numbers requesting that they identify the appropriate manual and to send you a copy. Our manuals are all in digital format and can be easily emailed to you for printing at your location.

When ordering, indicate the part number for the checked (√) position on the reference list of parts and the quantity required.

Warranty Claim Procedure

In the event of a malfunction of the equipment supplied under this manual and it is felt by the customer that it could be claimed under the terms of our Warranty, you will need to send the unit to Butterworth® for review and evaluation. A copy of our Warranty can be reviewed on page **Error! Bookmark not defined.**.

To send in a unit for warranty review, you will need to call the Butterworth® Sales Desk and advise the associate that you wish to return a machine(s) for warranty review. They will issue a Returned Goods Number for tracking your equipment once received by our company. This number must be included in your shipping documents else there will be a delay in evaluating this equipment. It is also necessary to complete the "**Error! Reference source not found.**" located on page "**Error! Bookmark not defined.**" in this manual. This report must be completed and returned with the equipment for the warranty claim process to commence. Be sure to affix the Returned Goods Number given to you by the Sales Desk in the appropriate box of the **Error! Reference source not found.**.

Phone : 281.821.7300
Fax : 281.821.5550
Internet E-Mail : eng@butterworth.com
Web Site : www.butterworth.com